PA 800 Plus Pharmaceutical Analysis System

System Maintenance Guide

RUO-IDV-05-5519-A
January 2018

This document is provided to customers who have purchased SCIEX equipment to use in the operation of such SCIEX equipment. This document is copyright protected and any reproduction of this document or any part of this document is strictly prohibited, except as SCIEX may authorize in writing.

Software that may be described in this document is furnished under a license agreement. It is against the law to copy, modify, or distribute the software on any medium, except as specifically allowed in the license agreement. Furthermore, the license agreement may prohibit the software from being disassembled, reverse engineered, or decompiled for any purpose. Warranties are as stated therein.

Portions of this document may make reference to other manufacturers and/or their products, which may contain parts whose names are registered as trademarks and/or function as trademarks of their respective owners. Any such use is intended only to designate those manufacturers' products as supplied by SCIEX for incorporation into its equipment and does not imply any right and/or license to use or permit others to use such manufacturers' and/or their product names as trademarks.

SCIEX warranties are limited to those express warranties provided at the time of sale or license of its products and are SCIEX's sole and exclusive representations, warranties, and obligations. SCIEX makes no other warranty of any kind whatsoever, expressed or implied, including without limitation, warranties of merchantability or fitness for a particular purpose, whether arising from a statute or otherwise in law or from a course of dealing or usage of trade, all of which are expressly disclaimed, and assumes no responsibility or contingent liability, including indirect or consequential damages, for any use by the purchaser or for any adverse circumstances arising therefrom.

For research use only. Not for use in diagnostic procedures.

AB Sciex is doing business as SCIEX.

The trademarks mentioned herein are the property of AB Sciex Pte. Ltd. or their respective owners.

AB SCIEX™ is being used under license.

© 2018 AB Sciex

AB Sciex LLC
500 Old Connecticut Path
Framingham, Massachusetts 01701
USA

Contents

CHAPTER 1: Installation Procedures, 5

Overview, 5

Introduction, 6

Install UV or PDA Detectors, 7

Calibrate the PDA Detector, 10

Install UV Detector Wavelength Filters, 11

Integrated 488 nm Solid-State Laser, 17
- Installation Requirements, 17
- Install the Solid-State Laser Module, 17
- Install the LIF Detector Filters, 17
- Install the Filter Housing into the Detector, 19
- Install the LIF Detector into the PA 800 Plus System, 20
- Connect the Probe to the Clamp Bar, 20
- LIF Detector Calibration, 21
- Troubleshooting Procedures, 24

Capillary Cartridge, 25
- Rebuild a Capillary Cartridge, 25
- Install a Capillary Cartridge into the PA 800 Plus System, 44

Universal Vials and Caps, 46
- Fill the Universal Vials, 46
- Fill the Micro Vials, 47

CHAPTER 2: Maintenance Procedures, 49

Maintenance Procedures, 49
- Opening Levers, Electrodes, and the Interface Block, 50
- Clean Electrodes, Opening Levers, and the Interface Block, 53

Coolant, 54

Fiber Optics (UV and PDA Detectors), 56

Lamp, 58

Instrument Care, 65

LIF Care and Maintenance, 65
Inspect the LIF, 65
How to Clean the LIF, 65
How to Store the LIF, 65
Replace the Quad-Rings, 66
Replace the Fuses, 67

CHAPTER 3: Connect the System to a Mass Spectrometer, 69

CE-MS/MS Mode Cartridge Procedures, 69
Install the Capillary in the Standard Cartridge, 70
Ground Connection, 72

APPENDIX A: LIF Test Mix Calibration and Performance Tests, 73

Relative Fluorescent Units (RFU), 73

Calibration Correction Factor (CCF), 73

Applying the CCF, 74

Automatic Calibration, 74

Calibration Method, 75

Non-fluorescent Solutions, 76

LIF Calibration for Different Dimension Capillaries, 76

LIF Calibration for Different Fluorescent Solutions, 77

Standard System Performance Test, 77

Troubleshooting, 79

APPENDIX B: Evaluating PA 800 Plus System UV Filters, 81

Overview, 81

Revision History, 85

CHAPTER 1

Installation Procedures

⚠ CAUTION

Prior to using the system, refer to the *PA 800 Plus Pharmaceutical Analysis System Overview Guide* for detailed information on the safe use and operation of the system.

Overview

The *PA 800 Plus Methods Development Guide* is a self-paced introduction to the operation of the SCIEX PA 800 Plus Pharmaceutical Analysis System, which includes the 32 Karat software. It contains a brief introduction to the technique of capillary electrophoresis (CE), an overview of the PA 800 Plus System hardware, tutorials for the most frequently used software features, and appendices of useful information.

The *Methods Development Guide* has been designed to assist users who are new to CE or to 32 Karat software. It contains step-by-step exercises that allow you to create methods, to generate and analyze data, and to report results. It does not cover every feature in the system or every aspect of capillary electrophoresis.

The on-instrument activities contain specific instructions for users with ultraviolet (UV), photodiode array (PDA), and laser-induced fluorescent (LIF) detector systems. The activities are progressive. Each builds on the previous one. To get the most from this guide, work through all the activities in order.

The activities that teach data reprocessing, calibration, and reporting, are all based on data collected with an ultraviolet detector system. The steps in these procedures are very similar regardless of the detector type used, so these exercises are important for users of all detector types. Data files for the post-run exercises are installed with the 32 Karat software.

Additional information can be found in the *32 Karat Software Online Help*. This can be accessed at any time while using the 32 Karat software. You can access Help through the Help menu located in the menu bar, by pressing the F1 key while working within the software, or any time a Help button is displayed in an application window.

Introduction

The installation procedures covered are listed as follows. Start with the type of detector, then continue to remaining items.

- Install UV or PDA Detectors
- Calibrate the PDA Detector
- Install UV Detector Wavelength Filters
- Install the Solid-State Laser Module
- LIF Detector Calibration
- Capillary Cartridge

WARNING

Disconnect the power before any instrument disassembly. Failure to do so can cause electrical shock or other injury.

WARNING

Maintenance or repair procedures not specifically described in this guide present a risk of electrical shock or injury. Refer additional servicing to SCIEX.

WARNING

Do not attempt to defeat any of the instrument interlocks or safety mechanisms.

Install UV or PDA Detectors

NOTE The following procedure covers installation of the UV and PDA detectors. For the capillary cartridge installation procedure, refer to Capillary Cartridge.

For information on how to install the LIF Detector, refer to Install the LIF Detector into the PA 800 Plus System procedure.

Before you start, you need:

- UV or PDA Detector
- Fiber optic cable (UV cable is 2 ended and the PDA cable is 3 ended)
- UV source optic module installed

1. Verify that power is off and no capillary cartridge is installed.
2. Lift the cartridge cover door and find the detector mounting location as shown in Figure 1.1 and Figure 1.2.
3. Remove the detector from the package and remove the protective connector caps.
4. Position the detector on the mounting location. Carefully slide the detector back to make contact with the back-plane receptacle.
5. Tighten the thumb screw until tight.
6. Unpack the fiber optic cable and remove the protective covers from each end (two covers for the UV cable and three covers for the PDA cable). Make sure to keep the protective covers for storage when not in use. Connect the cable to the clamp arm first, then to the detector.

Figure 1.1 Installing the UV Detector

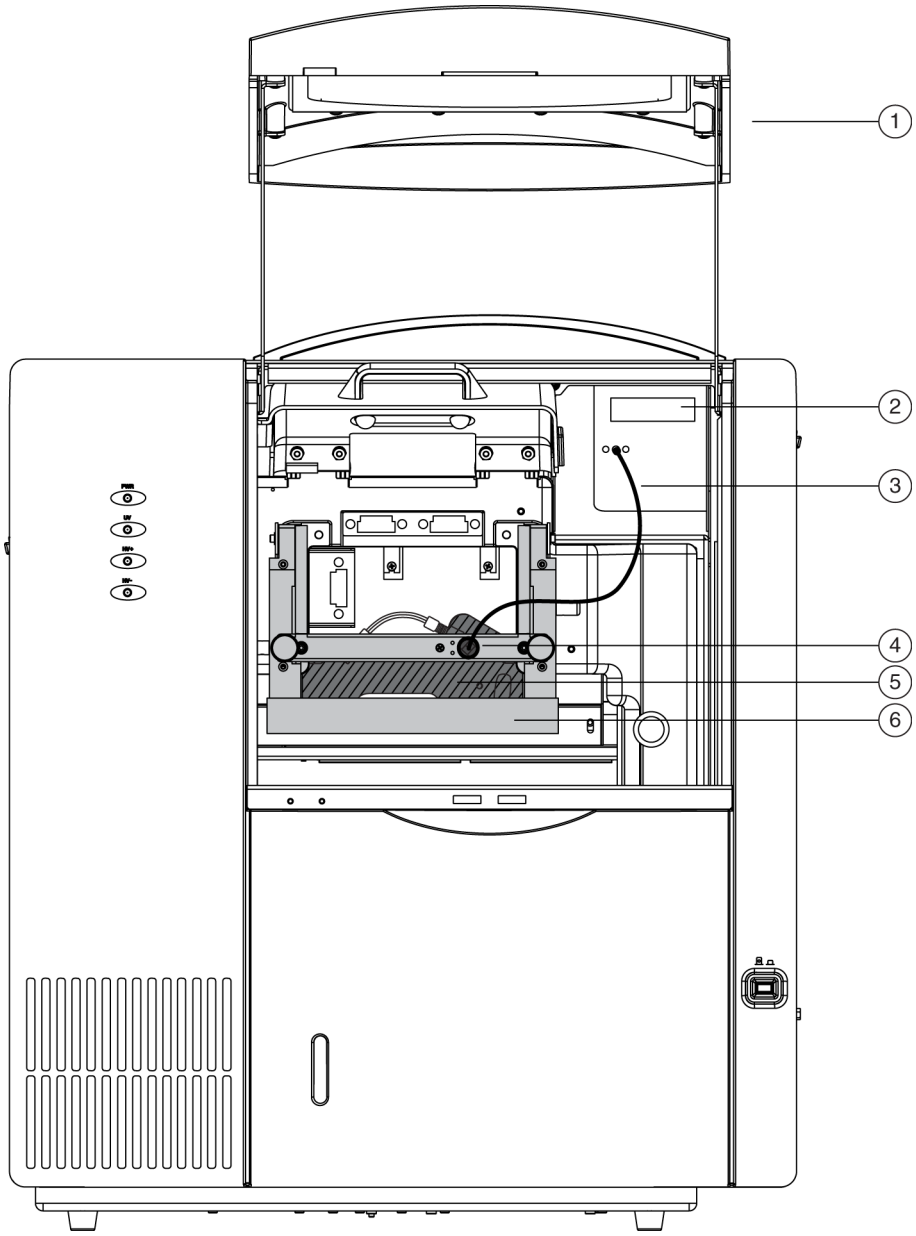

1. Outer Door Cover
2. UV Detector
3. Two-ended Fiber Optic Cable
4. Clamp Bar
5. Capillary Cartridge
6. Interface Block

Figure 1.2 PDA Detector Installation

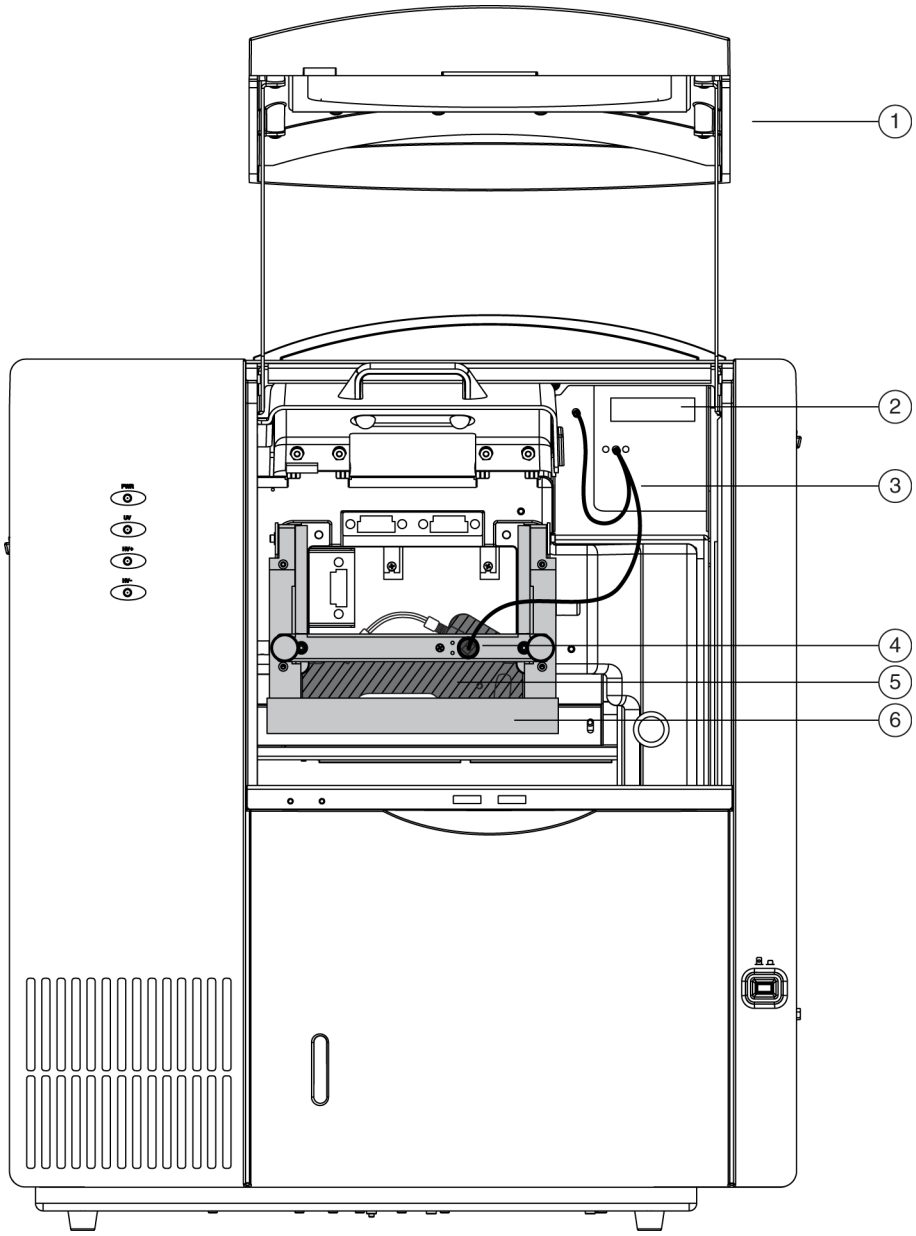

1. Outer Door Cover
2. PDA Detector
3. Three-ended Fiber Optic Cable
4. Clamp Bar
5. Capillary Cartridge
6. Interface Block

Calibrate the PDA Detector

The PDA detector must be calibrated following installation, after you change the lamp or other optical components, and when required as part of maintenance.

Calibrate the PDA detector as follows after the OpCal cartridge is installed in its place:

1. From the main menu, open an instrument configured with PDA detection.

2. From the Control menu, select **Direct Control**. The Direct Control window opens.

Figure 1.3 PDA Detector - Direct Control

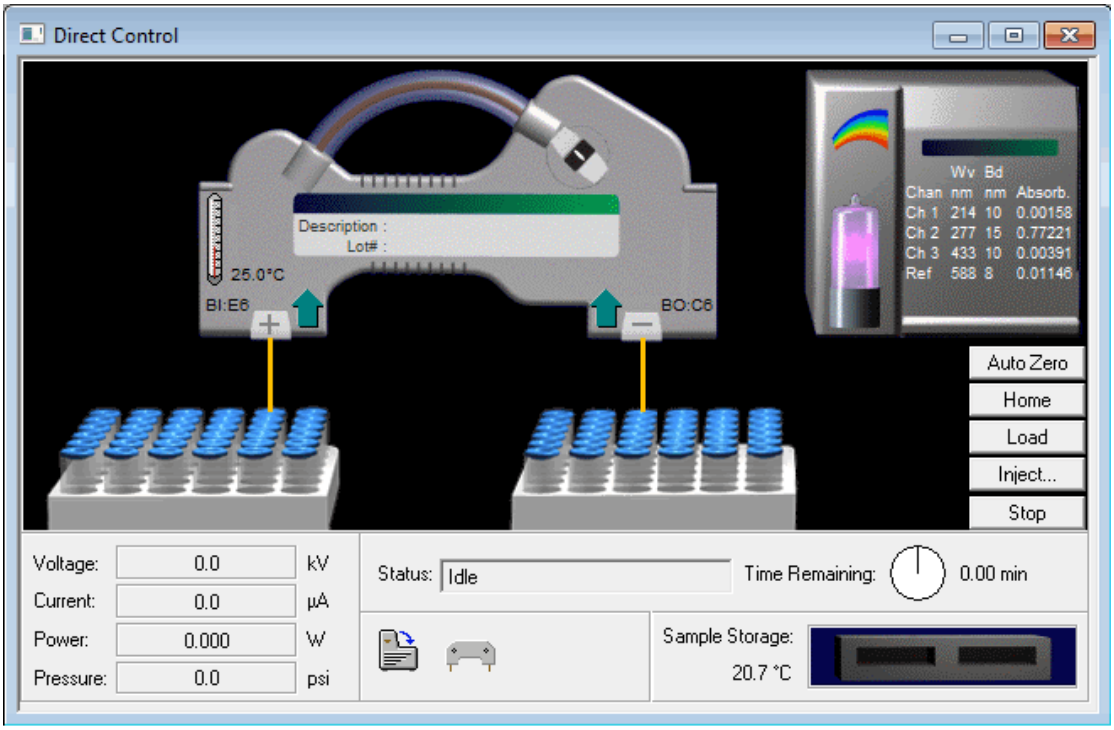

3 Select the rainbow above the lamp. The PDA Detector Parameters dialog opens.

Figure 1.4 PDA Detector Parameters

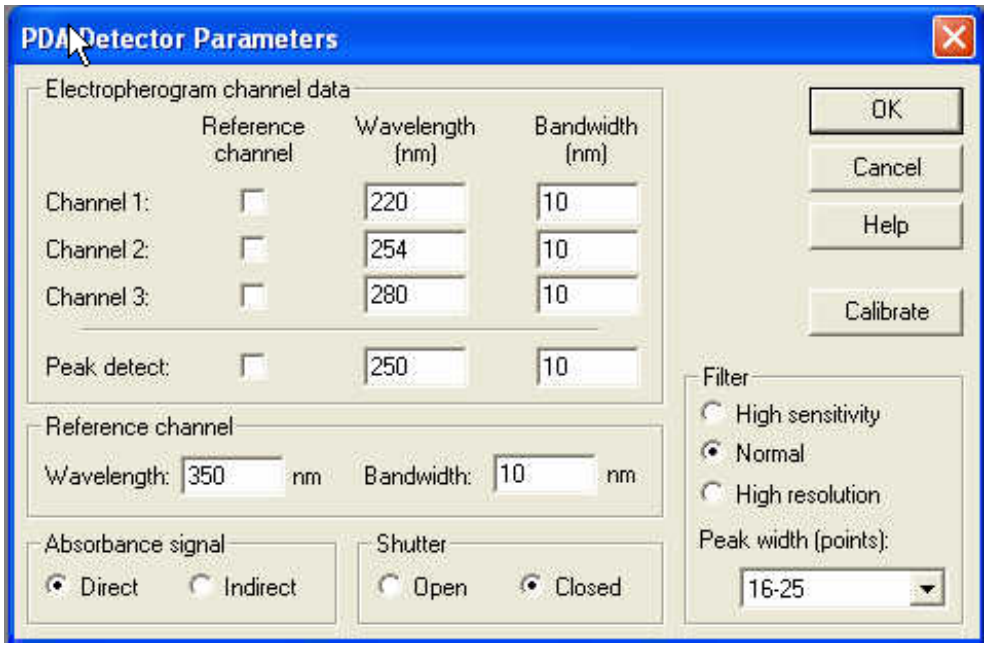

4 Select **Calibrate** to start the calibration sequence. The calibration requires approximately two minutes. Do not try to access the instrument during the calibration process.

Install UV Detector Wavelength Filters

When you install, the PA 800 Plus system includes 200 nm, 214 nm, 254 nm, and 280 nm filters. The following section is for reference.

Before you start, you need:

- Filters
- Powder-free gloves (nitrile or neoprene recommended)

1 Using **Direct Control**, move the trays to the load position.

2 Lift the outer door and then the cartridge cover door. The cartridge cover door is to the left of the UV Detector as shown in Figure 1.5.

Figure 1.5 Installing UV Detector Wavelength Filters

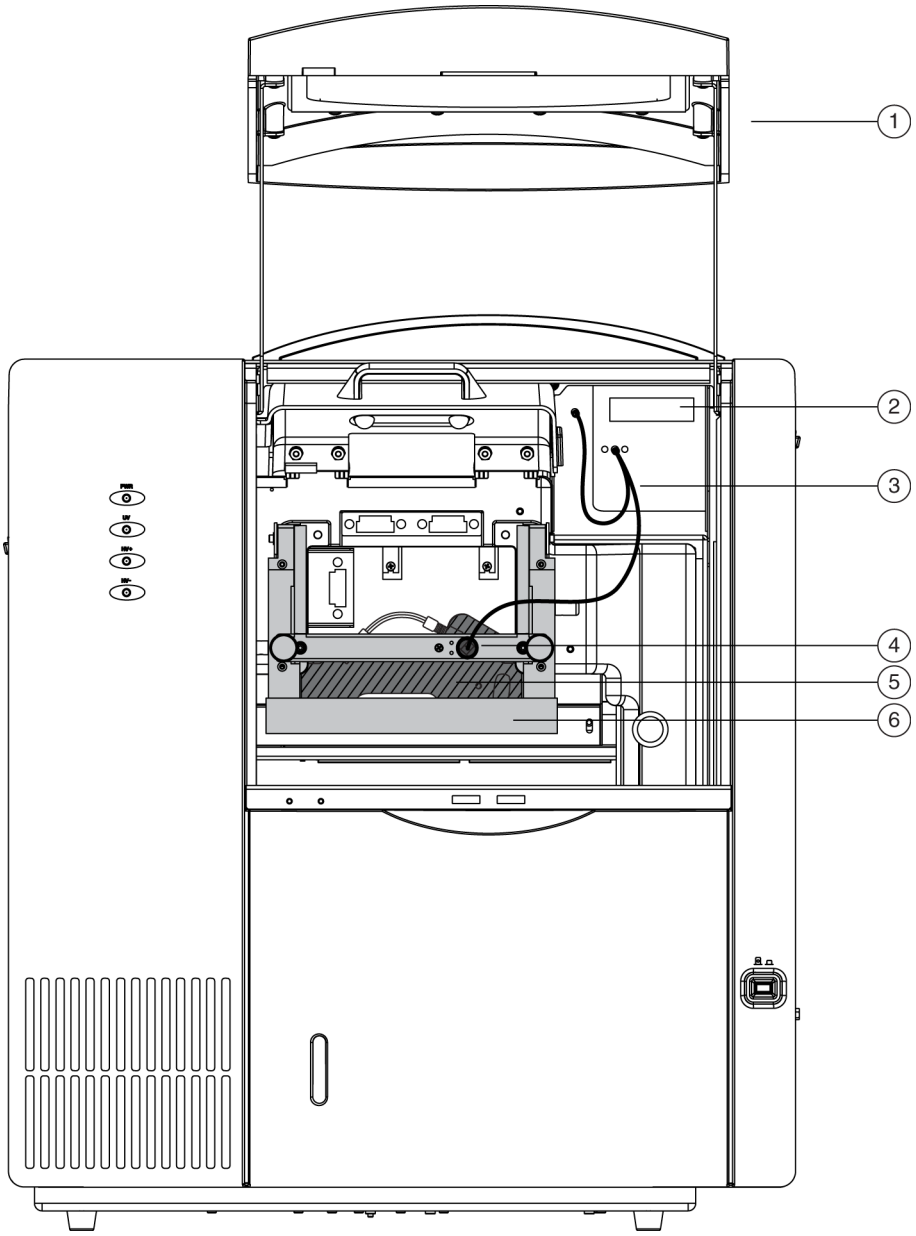

1. Outer Door Cover
2. Three-ended Fiber Optic Cable
3. UV Detector
4. Clamp Bar
5. Capillary Cartridge
6. Interface Block

3 Loosen the two thumb-screws and lift the clamp bar.

4 Remove the capillary cartridge from the interface block.

5 Turn the system power off.

6 Loosen the two thumb-screws and remove the optics source assembly. Put the assembly on a clean work surface. The optics source assembly is located right behind the interface block and has a horizontal bar handle as shown in Figure 1.6.

7 Remove the filter wheel access cover and rotate the filter wheel until the correct filter is visible (Figure 1.6).

Figure 1.6 How to Remove the Filter Wheel Access Cover

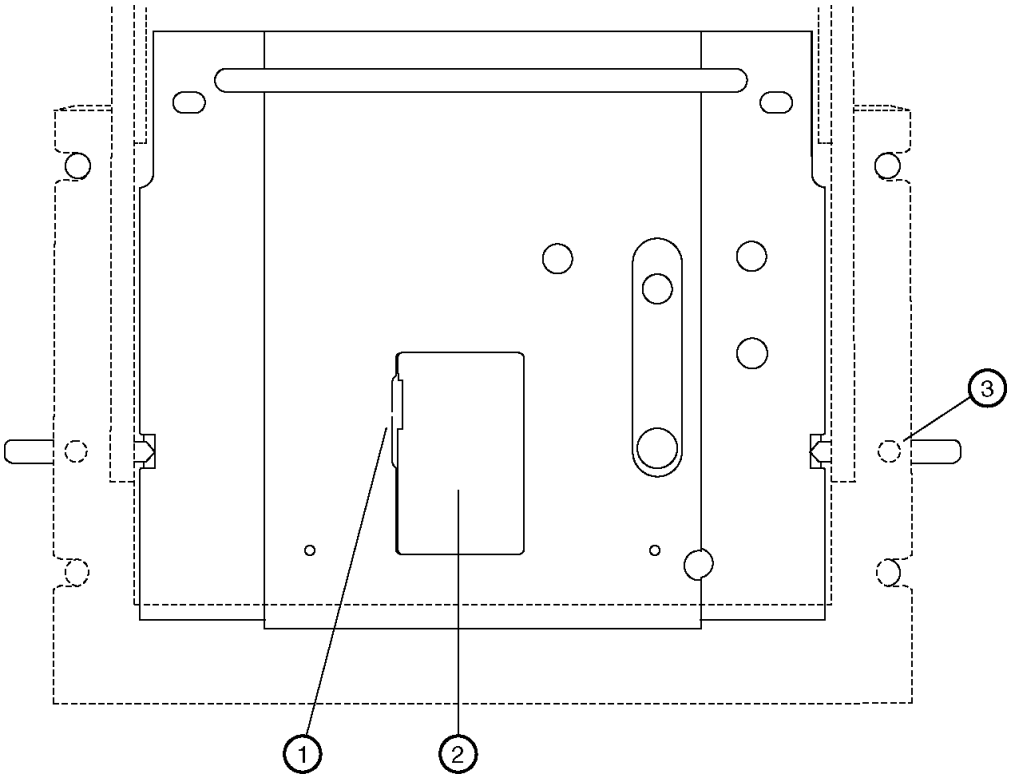

1. Open cover at the indicated point
2. Access Cover
3. Thumb screws (2), one on each side

8 Put on powder-free gloves (nitrile or neoprene recommended). Use the small forceps to remove the desired filters from the filter wheel. Touching the optical surfaces of the filters without gloves leaves skin oil that can cause improper filter performance.

9 Inspect each wavelength filter for a burned spot. Replace any filters that appear damaged.

UV filters are affected by heat and time. It is good practice to periodically check filter performance with a spectrometer or to replace the filters.

10 Insert the new filter with the reflective side facing inward (Figure 1.7).

Figure 1.7 How to Install a New Filter

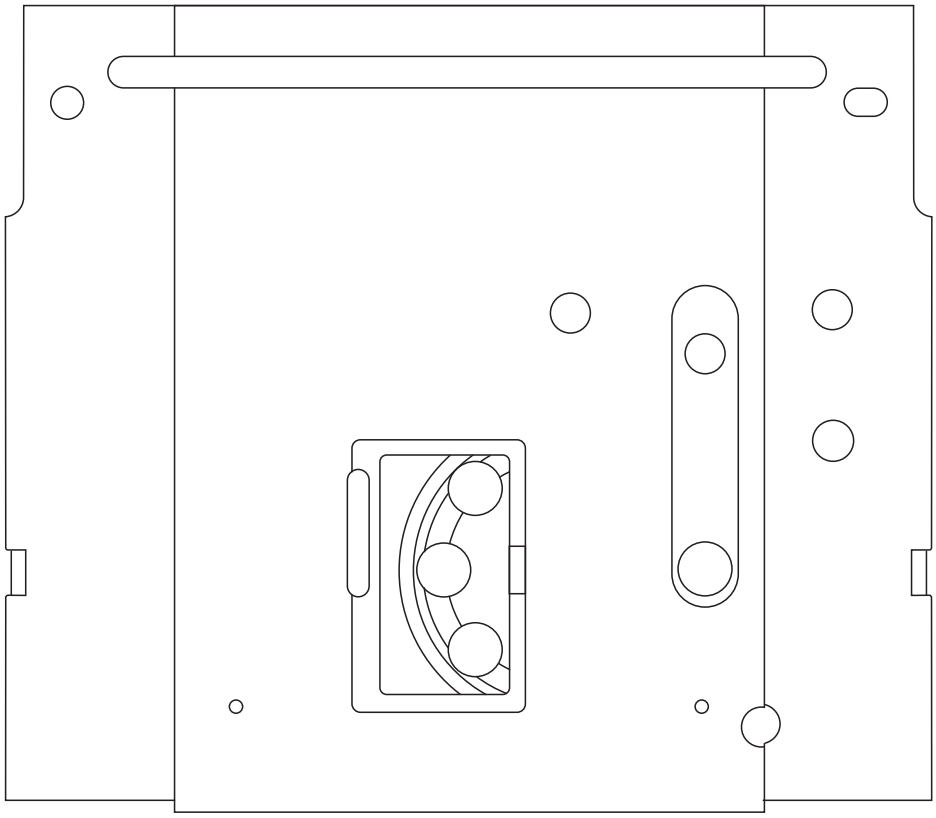

11 When all filters have been inspected or replaced, reinstall the filter wheel access cover.

12 Place the optics source assembly in the mounting location. Align the two upper guide pins and tighten the two thumb-screws.

13 Reinstall the capillary cartridge in the interface block.

14 Lower the insertion bar and tighten the two thumb screws.

15 Close the cartridge cover door.

16 Turn the system power on and start the 32 Karat software.

17 Enable System Administration mode by selecting **Tools > Enterprise Login on the enterprise screen**.

18 Right-click on an instrument icon and select **Configure > Instrument**. System Administration mode must be enabled, and the user must have instrument administration privileges to configure the instrument.

19 Select **Configure** on the instrument Configuration dialog.

The PA 800 Plus System Configuration dialog opens (Figure 1.8).

Figure 1.8 Configuration Dialog

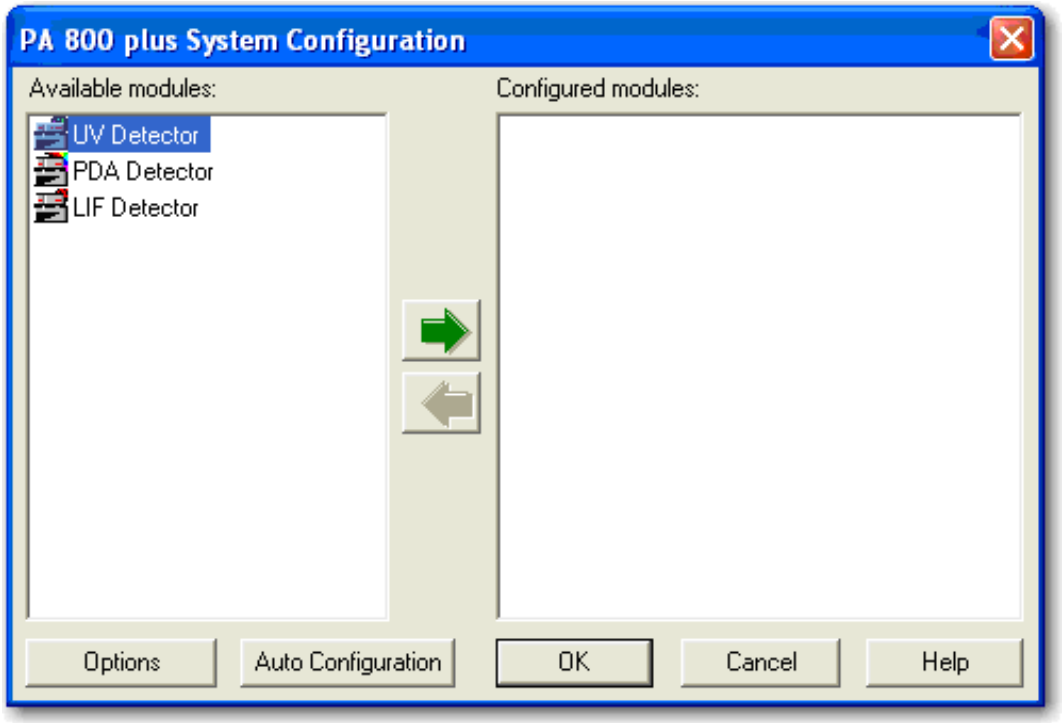

20 Drag selected detector icons from the left pane to the right pane.

Figure 1.9 System Configuration Dialog

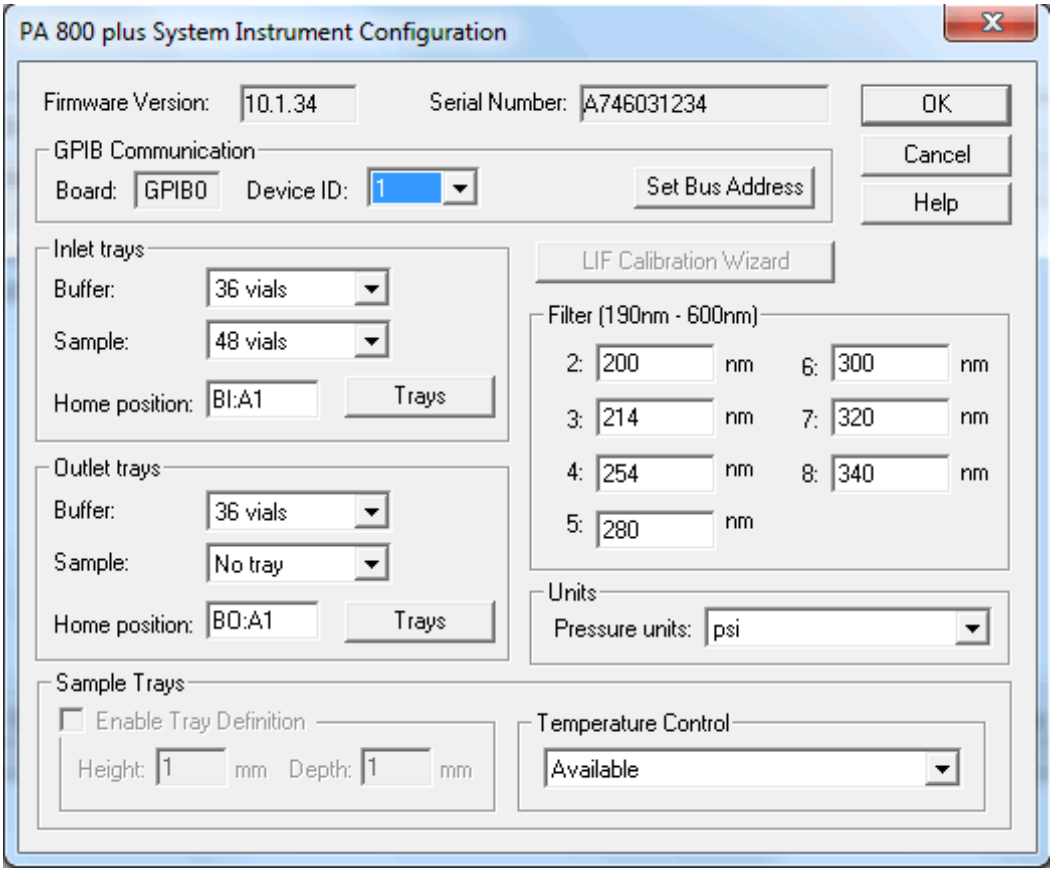

21 In the Filter dialog, enter the position and type for each of the installed filters.

Integrated 488 nm Solid-State Laser

WARNING

It is not safe to operate the solid-state laser module on any CE system other than the PA 800 Enhanced Protein Characterization System or the PA 800 Plus Pharmaceutical Analysis System. The 488 nm solid-state laser draws more current than the interconnect module, previously used with the 488 nm argon ion laser, and damages PA 800 systems that are not a PA 800 Enhanced Protein Characterization System upgrade or a PA 800 Plus Pharmaceutical Analysis System. The PA 800 Enhanced Protein Characterization System upgrade and the PA 800 Plus Pharmaceutical Analysis System include a higher-rated wiring harness to safely operate with the increased current.

The 488 nm solid-state laser is part of the interconnect module in the PA 800 *Enhanced* release and in the new PA 800 Plus Pharmaceutical Analysis System. The solid-state laser is compatible only with these two instruments. However, the new laser module does allow for connection of an external laser.

Before installing the solid-state laser, close the 32 Karat software instrument application.

WARNING

To prevent a possible shock hazard, power down the instrument before continuing with component installation.

Installation Requirements

A SCIEX service engineer must complete the initial installation of the 488 nm solid-state laser. This procedure includes proper laser configuration, installation of the updated wiring harness, setup of the LIF detector (if necessary), and verification of operation including system safety features.

Install the Solid-State Laser Module

WARNING

To prevent a possible shock hazard, power down the instrument before continuing with component installation.

If currently installed, remove the UV or PDA detector module from the PA 800 Plus system. Insert the solid-state laser module and secure by finger tightening the thumb screws at the front of the module.

Install the LIF Detector Filters

Before you install the LIF Detector Module, install the filters and filter housing.

The PA 800 Plus system ships with a single color LIF Detector. The filters installed for channel 1 have a 488 nm rejection filter and a 520 nm emission filter. The use of channel 2 requires a change to the detector. Contact SCIEX for assistance setting up and using channel 2.

The Filter Housing sits in the right side of the LIF Detector and has two filter holders, one for each detector channel. Refer to Figure 1.10 for a complete diagram of the Filter Housing. You can use one or more filters in each filter holder, depending on the application and the width of the filter. Typical operation is with two filters: one rejection filter and one emission filter. The rejection filter prevents scattered laser light from passing into the detector. The emission filter is a band-pass filter that allows only the fluorescent signal at a selected wavelength to pass into the detector.

Depending on the application and laser, you can use any standard 0.5 inch diameter filters in the range of 350 nm to 750 nm. The total thickness of the filters cannot exceed 0.350 inches. To install filters into channel 1 of the filter holder. Refer to Figure 1.10.

Install a Filter in the Filter Housing

1 Hold the filter housing in the same orientation as shown in Figure 1.10.

Figure 1.10 Install Filters in the Filter Housing

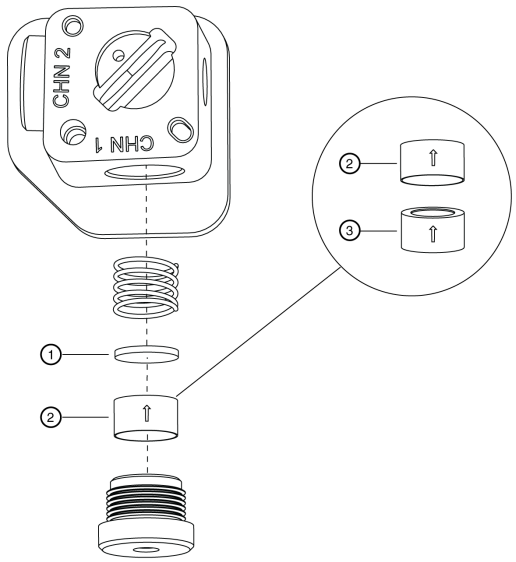

1. Notch Filter
2. Emissions (Band Pass) Filter (Bottom View)
3. Emissions (Band Pass) Filter (Top View)

2 Hold the filter with the arrow on the outside edge of the filter pointing up.

NOTE Make sure to handle filters by the edges.

3 Carefully put the filter into the filter holder.

4 When all filters are in the filter holder, insert the spring and install the filter holder in the appropriate location (channel 1 or 2) in the filter housing.

NOTE If there is no arrow on the edge of the filter, look at both sides of the filter and find which side has the more reflective surface. The more reflective side has a wide-edge rim that extends beyond the filter surface. Install the filter with the more reflective side toward the light source (the laser). In LIF detection, laser light comes from the center of the filter housing. While holding the housing in the correct orientation, install a filter with the arrow — or reflective side with the wider rim — pointing up (toward the filter housing).

NOTE If you install a filter incorrectly, performance degrades even though the filter appears operational.

Install the Filter Housing into the Detector

Insert the filter housing into the opening in the right side of the detector. Refer to Figure 1.11. Make sure the keyed corner of the filter housing lines up with the keyed corner of the Detector Module. To ensure correct installation, the housing only fits into the opening in the orientation shown in Figure 1.11. After you change the filters, allow the system to stabilize for 15 minutes before use.

Figure 1.11 Install the Filter Housing

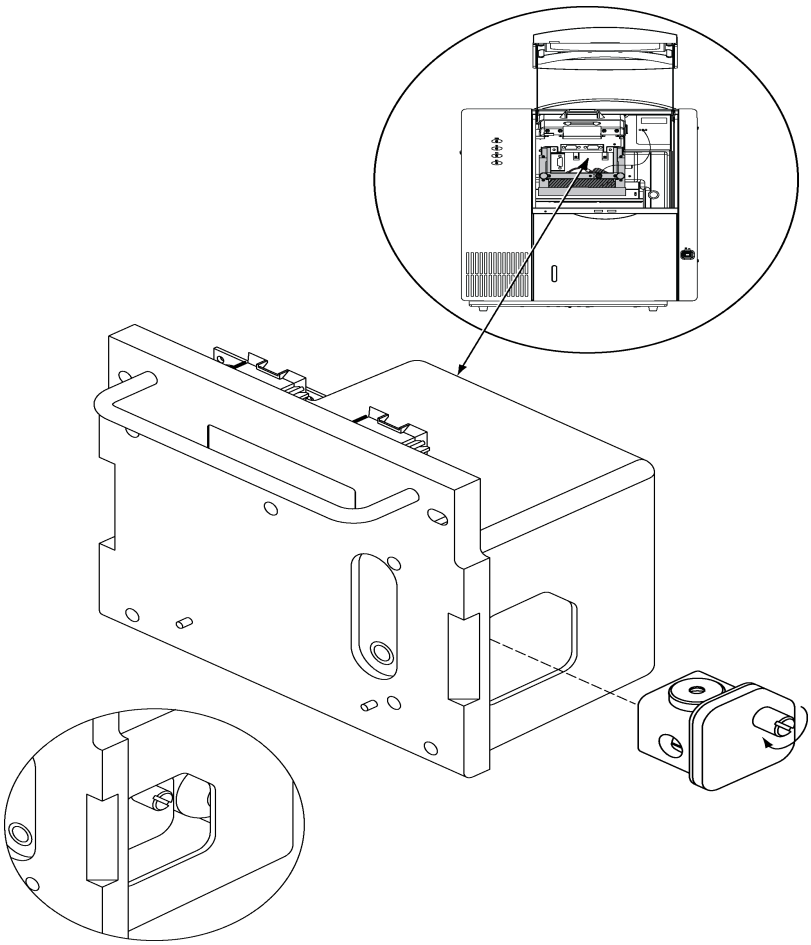

Install the LIF Detector into the PA 800 Plus System

WARNING

To prevent a possible shock hazard, power down the PA 800 Plus instrument before continuing with component installation.

Before installing the LIF Detector, remove the UV source optics module by loosening the knobs at the sides of the interface block. Remove the module using the handle.

Connect the LIF Detector into the PA 800 Plus system. Keep the two female connectors on the LIF Detector level with the two male connectors found on the instrument. Lock the Detector Module in position by fastening the captive screws until finger tight.

Connect the Probe to the Clamp Bar

IMPORTANT Be sure to install the LIF cartridge in the instrument and secure the clamp bar before connecting the probe.

To connect the probe to the LIF Cartridge, align the two pins on the left side of the probe and probe body to the two pin holes and the probe hole in the clamp bar. Squeeze the probe to open its jaws and carefully attach the probe to the clamp bar. Refer to Figure 1.12.

When not in use, install the probe in the probe holder on the 488 nm laser module. This provides mechanical protection for the probe and shields it from dust and other particles.

Figure 1.12 Connect the Probe to the LIF Cartridge

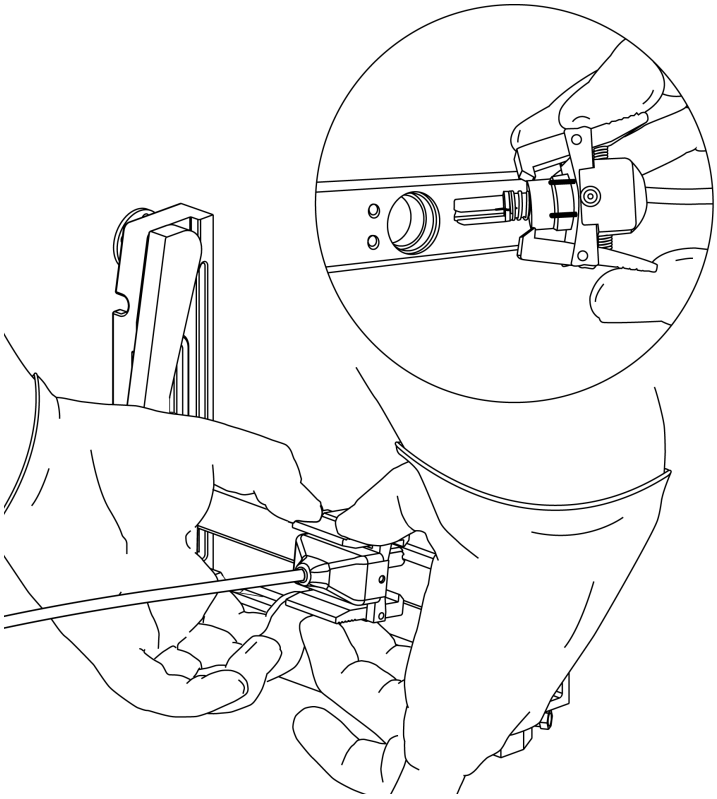

LIF Detector Calibration

LIF detector calibration allows for normalization of the signal generated by an analyte relative to a known concentration of sodium fluorescein. Perform calibration after installation of a new capillary or after changing a detector or cartridge.

Required Materials

- LIF Performance Test mix (PN 726022)
- DDI H_2O

NOTE System Administration must be enabled, and the user must have instrument administration privileges.

From the enterprise window, select Tools > System Administration to enable System Administration mode.

Automatic Calibration

1. Right-click on the desired instrument icon and select **Configure Instrument**.
2. Select **Configure** on the instrument **Configuration** window.
3. The 32 Karat Software Configuration dialog opens.
4. Select the detector icon in the right pane of the **System Configuration** window.
5. Select **LIF Calibration Wizard** from Instrument Configuration.
6. Select **Auto**, then select **Next** to continue. Refer to Figure 1.13.

Figure 1.13 Calibration Wizard - Auto Select

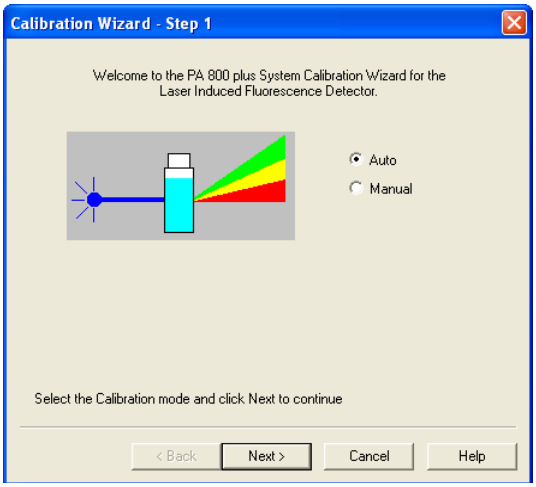

7 Next, enter the target RFU value and capillary dimensions. Refer to the appropriate application guide for a recommended target RFU value. For example, the target value for an N-CHO-coated capillary is 7, not 35 as shown in Figure 1.14. Select **Next**.

Figure 1.14 Calibration Wizard - Step 2

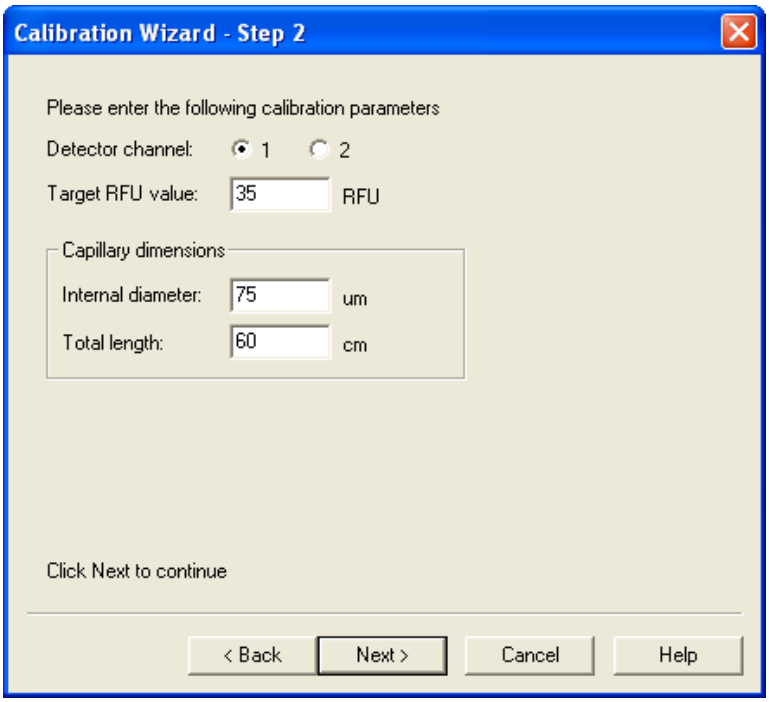

8 Fill the reagents into the buffer vials and put the buffer vials in the following positions of the Inlet Buffer Tray:

- A1: DDI H_2O
- B1: LIF Performance Test Mixture

9 Select **Next** to perform the automatic calibration (Figure 1.15).

NOTE The wizard opens buffer in position A1. Only use buffer for a system performance test when the installed capillary is bare-fused silica. For coated capillaries, follow the application guide instructions for test mix calibration or substitute water for buffer.

Figure 1.15 Calibration Wizard - Step 3

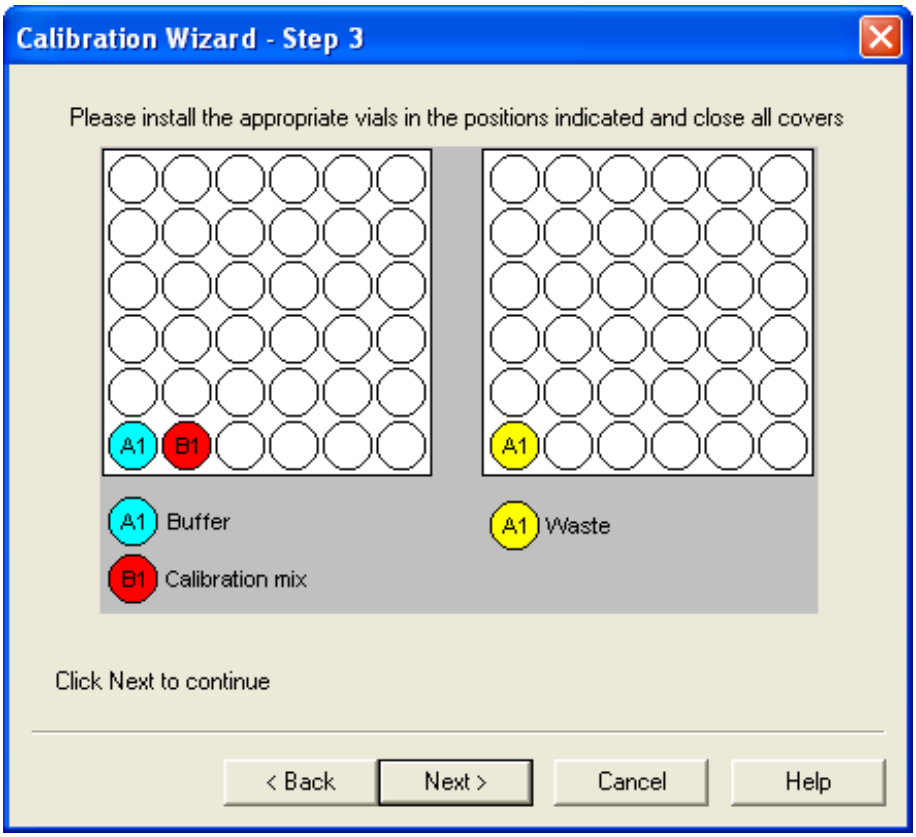

10 Select **Accept** once the calibration completes (Figure 1.16).

Figure 1.16 Calibration Wizard - Step 4

Troubleshooting Procedures

CCF < 1

CCF values less than one indicate the system is working more efficiently than expected. Verify the following:

- Make sure the appropriate dimensions of the capillary are used.
- Verify laser output for the laser in use on the PA 800 Plus system.
- Correct filters are installed in the LIF Detector.

If the CCF is still less than 1 but not less than 0.1, there is probably no problem with the system. Run a standard and verify acceptable performance of the system.

If the system performance is not acceptable or the CCF is less than 0.1, contact a SCIEX service representative.

CCF > 1

CCF values greater than one indicate the system is not working as efficiently as expected. Verify the following:

- Make sure the appropriate dimensions of the capillary are used.
- Verify laser output for the laser in use on the PA 800 Plus system.
- Correct filters are installed in the LIF detector.

Replace the chemistries and capillary, then repeat the calibration.

If the calibration is more than 1.0 but less than 10, run a standard to determine whether the system performance is still acceptable. If the CCF is greater than 10 or the system performance is not acceptable, contact a SCIEX service representative.

No Step Change Detected

The LIF calibration method is a comparison of detector signals between a non-fluorescent solution and a known fluorescent solution. When you rinse with the non-fluorescent solution followed by a fluorescent-solution rinse, the first part of the detector signal should be near zero and the second part of the detector signal should be near the target fluorescent value. This detector output is step-shaped. If a step change is not seen, the appropriate solutions are not passing the detector or the detector cannot detect the solutions. Verify that the solution rinses through the capillary, from buffer inlet A1 to an empty buffer vial in outlet B1, by performing a direct control 5 minute pressure rinse of water at 20 psi. Once the rinse starts, lift the sample cover. Observe the outlet end of the capillary in B1. Droplets should have formed on the outlet end of the capillary. If there are no droplets, either the capillary is plugged or the instrument has a pressure failure. Replace the capillary and repeat the rinse. If there is no droplet seen, contact a SCIEX service representative. If flow through the capillary is verified, the detection system is the only possible cause when no step is detected. Verify the correct filters are installed in the LIF detector. Verify the laser supplied with the PA 800 Plus system is connected and the LASER ON light is lit. Manually set the CCF to 1.0. Run the calibration test with a new capillary and chemistries. If there is no step change detected, contact a SCIEX service representative.

Capillary Cartridge

You must install the appropriate capillary for the application to run properly. To determine the capillary needed, consult the specific application documentation for your PA 800 Plus instrument.

IMPORTANT The Capillary Cartridge rebuild procedures are also in video form. They are accessible from the PA 800 Plus release CD, from the www.sciex.com web site, and from the PA 800 Plus software.

Instructions on the removal and installation of a capillary are in the Rebuild a Capillary Cartridge procedure below.

After you complete the capillary installation, refer to Install a Capillary Cartridge into the PA 800 Plus System, also in this chapter.

Rebuild a Capillary Cartridge

Use the instructions below to complete the tasks of removing a capillary from a cartridge, replacing the coolant tubing, and replacing a capillary. These instructions allow you to assemble a cartridge for the PA 800 Plus system.

NOTE If you have been successfully using a cartridge, and it begins to leak coolant during use, remove the cartridge immediately from the system and rebuild the cartridge (refer to the following instructions). If you need to change the capillary length for any reason, first refer to the appropriate application guide for the length and type of capillary to use, and then refer to the following sets of instructions:

- Remove the Capillary
- Replace the Coolant Tubing and Seals
- Replace the Capillary
- Install the Aperture Clip
- Install the Seal-Retainer Clips
- Trim the Capillary Ends
- Install the O-Ring

Required Materials

- Magnifying Lens
- Safety Glasses
- Forceps
- Ruler
- Felt-Tip Marker
- Cartridge Assembly
- Coolant Tubing Kit
- Capillary
- Capillary Rebuild Kit
- Aperture Plug (UV/PDA 100 x 200, 100 x 800, or LIF Probe Guide)
- Aperture O-ring
- O-ring Installation Tool
- Cleaving Stone
- Capillary Length Template
- Methanol
- Deionized Water

Figure 1.17 Capillary Cartridge Rebuild Components

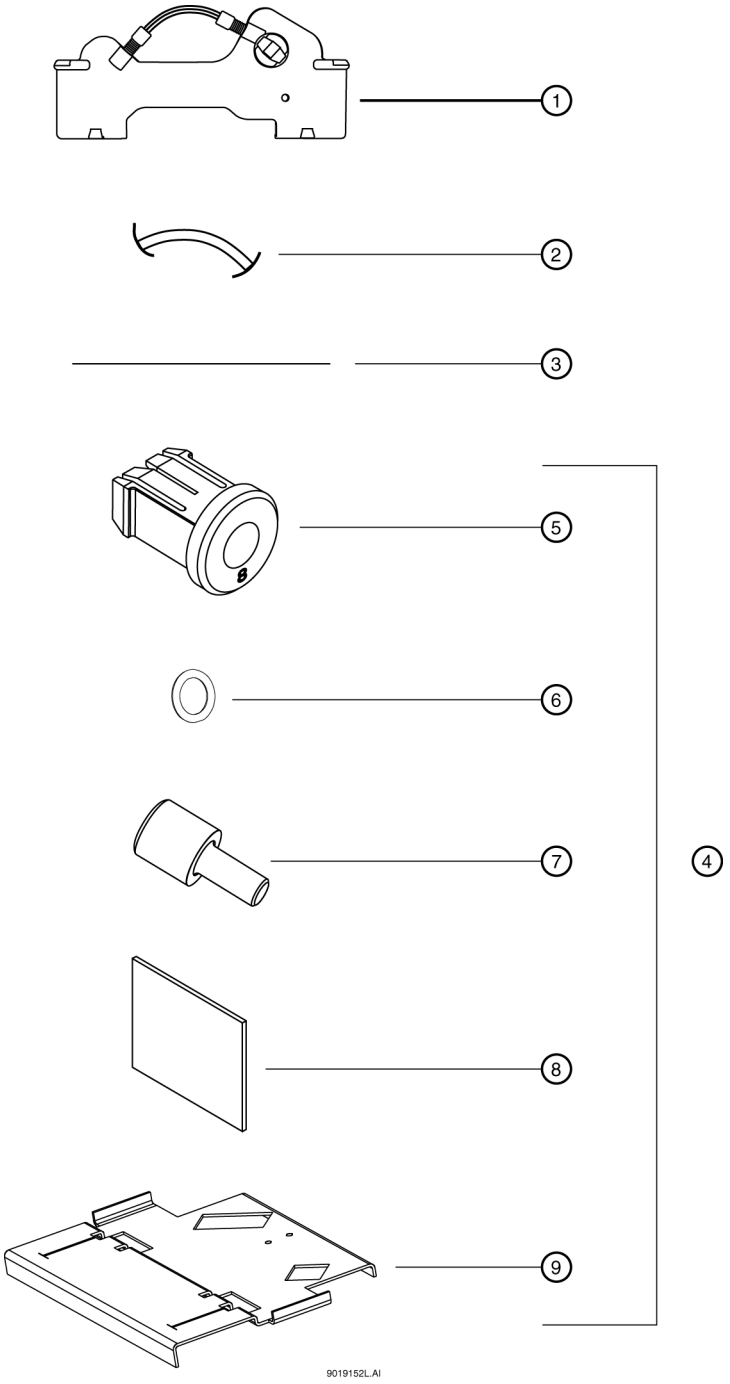

1. Cartridge Assembly
2. Coolant Tubing
3. Capillary
4. Capillary Rebuild Kit
5. Aperture Plug (UV/PDA) 100 x 200, 100 x 800
6. Aperture O-ring
7. O-ring Installation Tool
8. Cleaving Stone
9. Capillary Length Template

Remove the Capillary

IMPORTANT If you plan to use the capillary again, prepare the capillary for storage as recommended in the appropriate application guide.

IMPORTANT SCIEX recommends you do not install a pre-cut capillary. Doing so can cause the capillary window to break.

1 Carefully pull the seal-retainer clips from the capillary cartridge (Figure 1.18).

WARNING

Handle the capillaries with care. The sharp ends of broken capillaries can cause puncture wounds.

Figure 1.18 Remove the Seal-Retainer Clips from the Capillary Cartridge

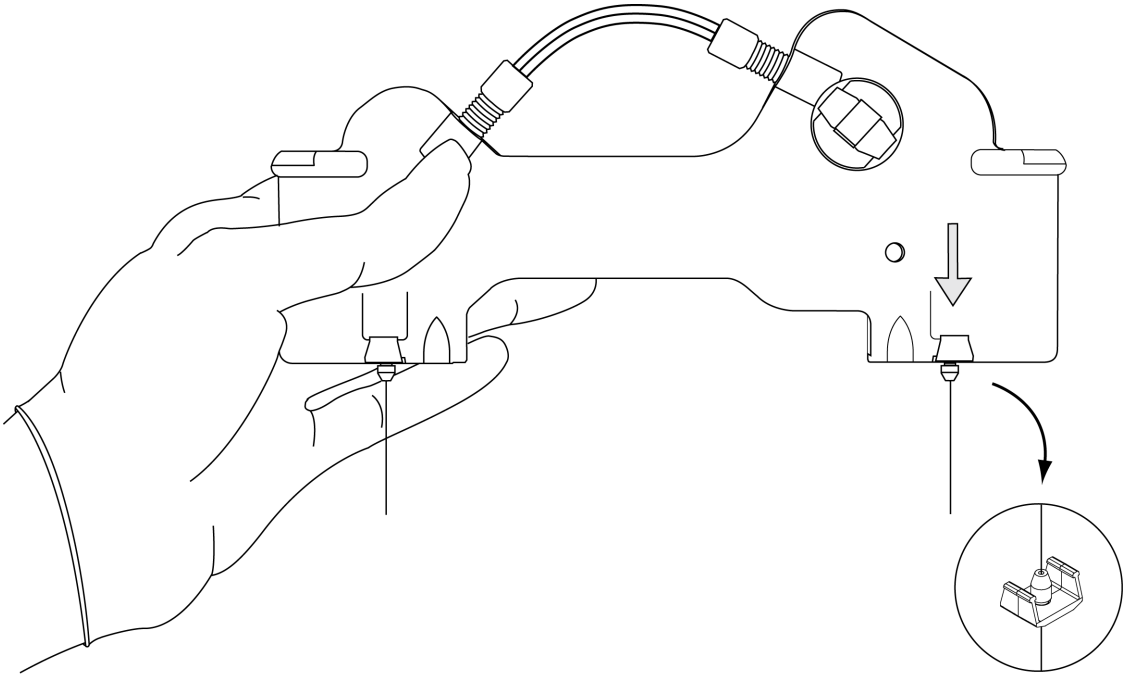

9019286L.AI

2 Inspect the seals. If they appear worn, damaged, or leaking, replace with new seals.

3 Remove the aperture by pushing from the front of the cartridge and pulling out from the back (Figure 1.19).

Figure 1.19 Removing Aperture from Cartridge (Back View)

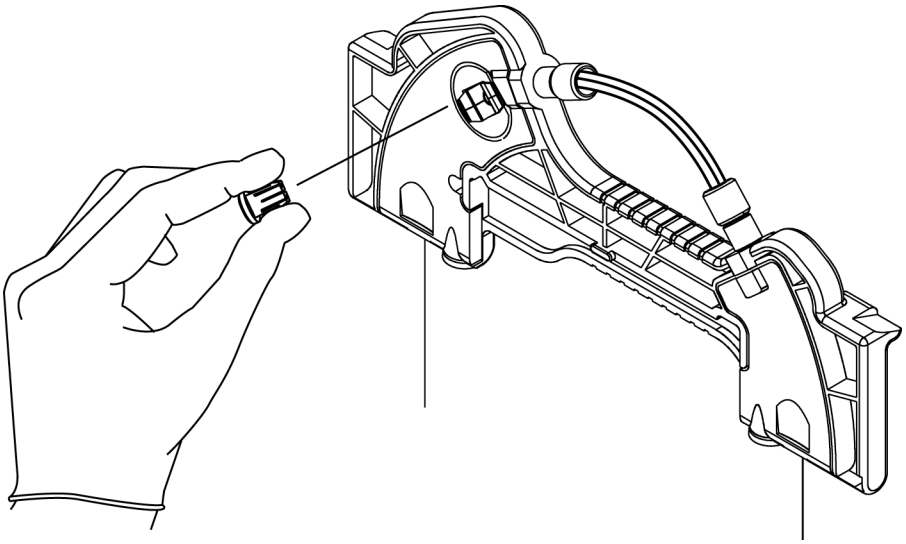

4 Remove the O-ring from inside the aperture. To do this, gently tap the aperture on the work surface or use a small gripping tool. Be careful not to damage the aperture.

5 Grasp the capillary at the cartridge outlet and pull the capillary firmly to remove it (Figure 1.20).

NOTE Once the capillary window is out of the cartridge, grasp the capillary above the window and continue pulling until the capillary comes completely out of the cartridge.

IMPORTANT To prevent breaking the capillary, do not pull it out of the cartridge from the inlet side. Remove the capillary from the outlet side of the cartridge only.

Figure 1.20 Removing the Capillary

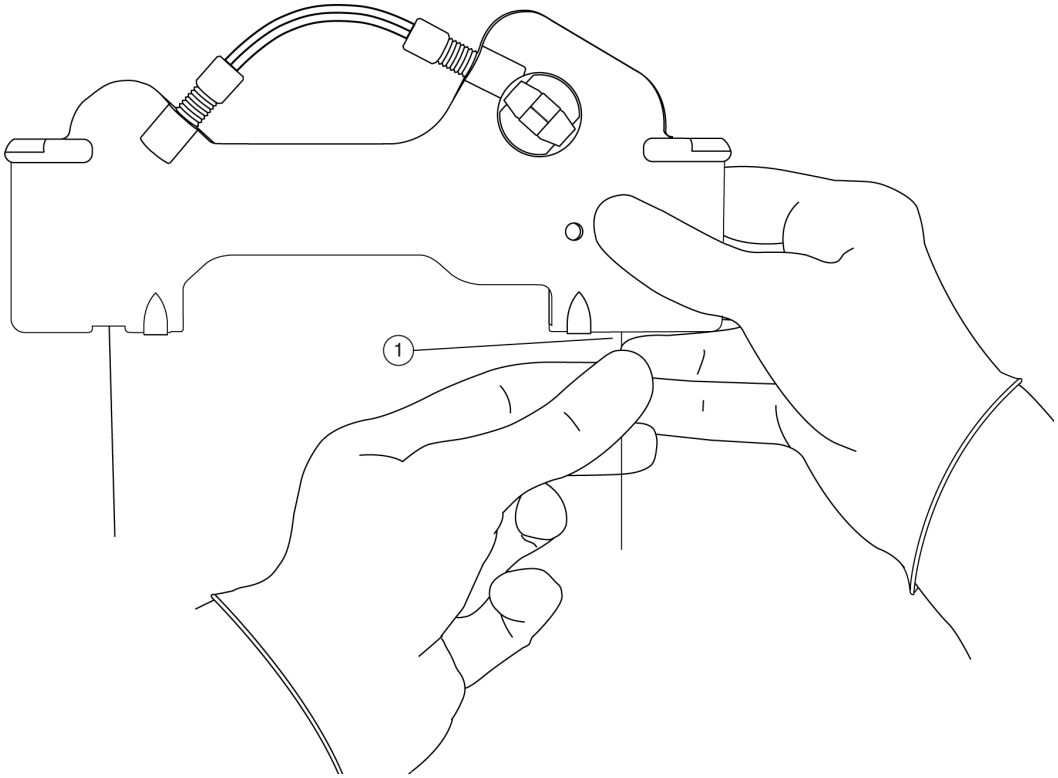

1. Outlet Side Removal

NOTE The following procedure is only necessary to replace damaged tubing, to replace an O-ring, or to use a different tubing length.

Replace the Coolant Tubing and Seals

1 Loosen and remove the tubing nut from the outlet side of the cartridge.

2 Remove the coolant tubing from the outlet side of the cartridge (Figure 1.21).

NOTE The tubing nut and ferrule are still attached to the coolant tubing.

3 Loosen and remove the tubing nut from the inlet side of the cartridge.

4 Remove the coolant tubing from the inlet side of the cartridge (Figure 1.21).

NOTE The tubing nut, ferrule, and O-ring are still attached to the coolant tubing.

Figure 1.21 Coolant Tubing, Tubing Nut, Ferrule, and O-Ring

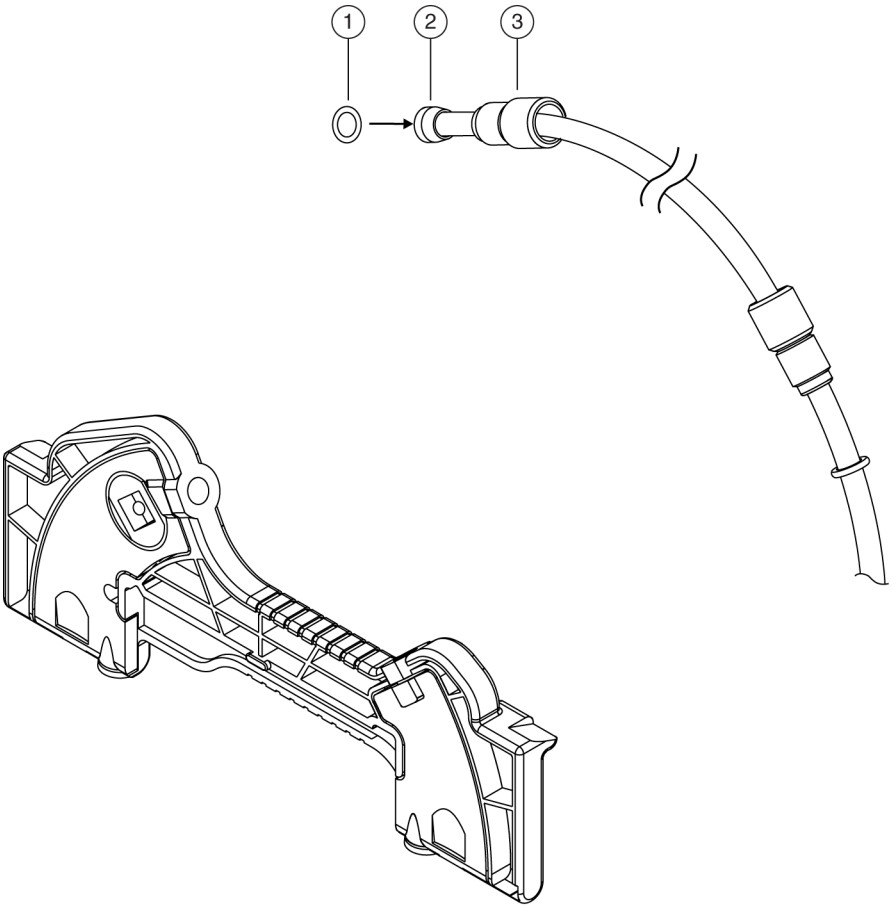

1. O-ring
2. Ferrule
3. Tubing Nut

5 Remove the O-ring from the outlet side of the cartridge using a small gripping tool if necessary.

6 Use Table 1.1 to match a pre-formed coolant tubing length and loop shape with a capillary length. For the capillary lengths in Table 1.1, use only the pre-formed coolant tubing lengths listed. For coolant tubing lengths that are not pre-formed, use the following guidelines to create tubing loops:

- For total capillary lengths longer than 60.2 cm and less than 90 cm, make one loop in the coolant tubing.
- For total capillary lengths 90 cm or longer, make two loops in the coolant tubing.

Table 1.1 Capillary Length

Capillary Length to Detector	Total Capillary Length	Pre-Formed Coolant Tubing Description
20 cm	30.2 cm	Pre-Formed Coolant Tubing (no loop) for a Total Capillary Length of 30.2 cm
30 cm	40.2 cm	Pre-Formed Coolant Tubing for a Total Capillary Length of 40.2 cm 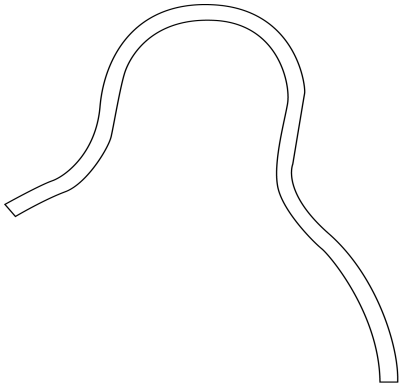
40 cm	50.2 cm	Pre-Formed Coolant Tubing for a Total Capillary Length of 50.2 cm 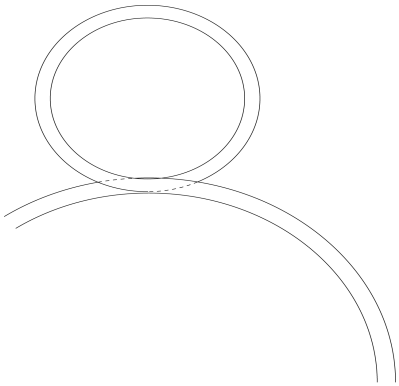
50 cm	60.2 cm	Pre-Formed Coolant Tubing for a Total Capillary Length of 60.2 cm 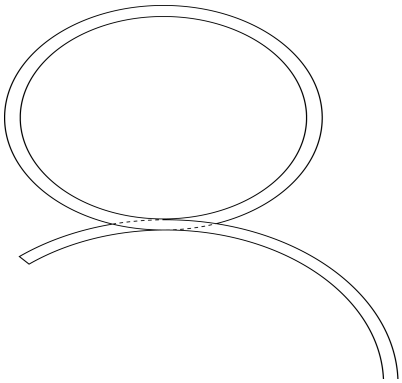

NOTE Use the pre-formed tubes supplied in the coolant tubing kit (PN 144717) to prevent kinks and restrictions.

7 Slide one tubing nut, ferrule (tapered edge toward the middle of the tube length), and O-ring over each end of the new coolant tubing (Figure 1.22).

NOTE Always install a new ferrule. Used ferrules can cause leaks.

Figure 1.22 Proper Alignment of O-ring, Ferrule, and Tubing Nut

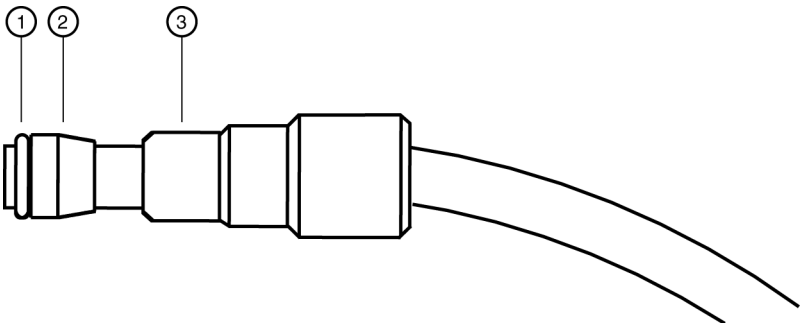

1. O-ring
2. Ferrule
3. Tubing Nut

8 On the inlet side, put the coolant tubing in the cartridge and press the tubing firmly into the cartridge base. Make sure the tubing slides completely into the cartridge base (Figure 1.23).

Figure 1.23 Coolant Tubing in the Cartridge (Back View)

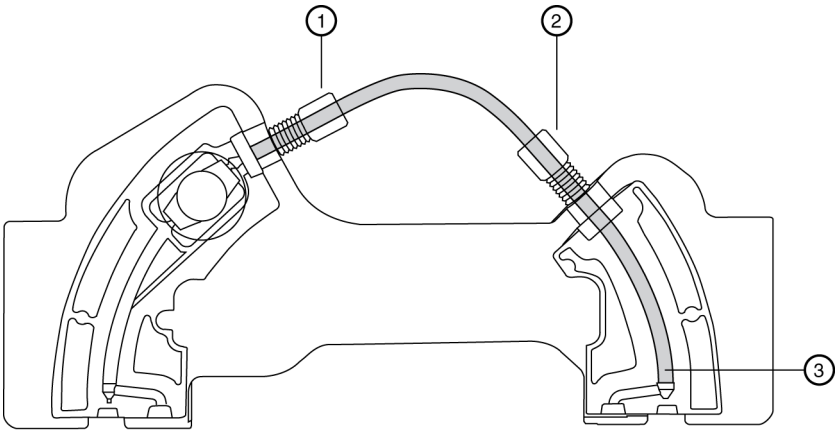

1. Cartridge Outlet Side
2. Cartridge Inlet Side
3. Tubing inserted completely into the base

9 On the inlet side, push the tubing nut, ferrule, and O-ring in and tighten the tubing nut finger tight.

WARNING

Do not over tighten. Over tightening the tubing nut can cause the cartridge to break. If leaking occurs, check the cartridge housing for cracks. If there is no visible damage to the cartridge, verify that the O-ring is centered on the tubing and replace any worn or damaged tubing or ferrule.

IMPORTANT Do not sharply bend the coolant tubing.

10 On the outlet side, insert the other end of the coolant tubing in the cartridge and press the tubing firmly into the cartridge base (Figure 1.23).

11 On the outlet side, continue to press the tubing in. Push the tubing nut, ferrule, and O-ring in and tighten the tubing nut finger tight.

Replace the Capillary

1 Remove one new capillary from its storage container.

IMPORTANT Do not bend the capillary at the window. This can break the capillary.

2 Carefully uncoil and straighten the capillary. The capillary has a clear plastic protective tubing over it with an additional rectangular protective shield over the window portion. Tape down the protective tubing near the end of the capillary farthest from the window area.

3 From the end closest to the window area, pull the capillary out of the protective tubing. When the window itself is out of the protective tubing, continue pulling the capillary without pulling on the window. To do this, grasp the capillary between the window and the edge of the tubing.

4 Measure 10.2 cm from the middle of the capillary window to the outlet end. Using a felt-tip pen, mark the capillary just outside the measured length. Refer to Figure 1.24. This is the short side of the capillary closest to the window.

NOTE Do not touch the capillary window. It is fragile and finger oils reduce detection sensitivity.

NOTE Make sure the position markings are just outside the measured end points such that you remove the markings when trimming the capillary.

5 Measure the required length from the middle of the capillary window to the inlet end. Using a felt-tip pen, mark the capillary just outside the measured length. This is the long side of the capillary farthest from the window. Refer to Figure 1.24.

NOTE To ensure consistent measurements, place tape on the edge of a workbench and mark the measurements on the tape. This allows you to line up the capillary with the marks on the tape when preparing a new capillary.

Figure 1.24 Capillary Position Markers

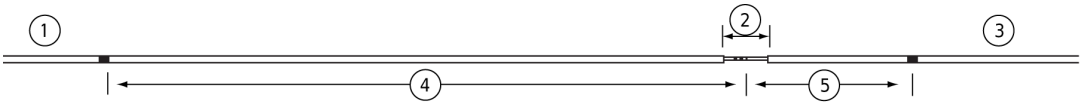

1. Inlet
2. Window
3. Outlet
4. Desired Length to Detector
5. 10.2 cm

6 Do not cut the capillary to size at this time.

7 Insert the long side of the capillary (the end farthest from the capillary window) into the outlet side of the cartridge (Figure 1.25).

NOTE If you are using the cartridge for the first time, you might need to spin the capillary while inserting it to pierce the aperture.

Figure 1.25 Long End of Capillary into Outlet Side (Back View Shown)

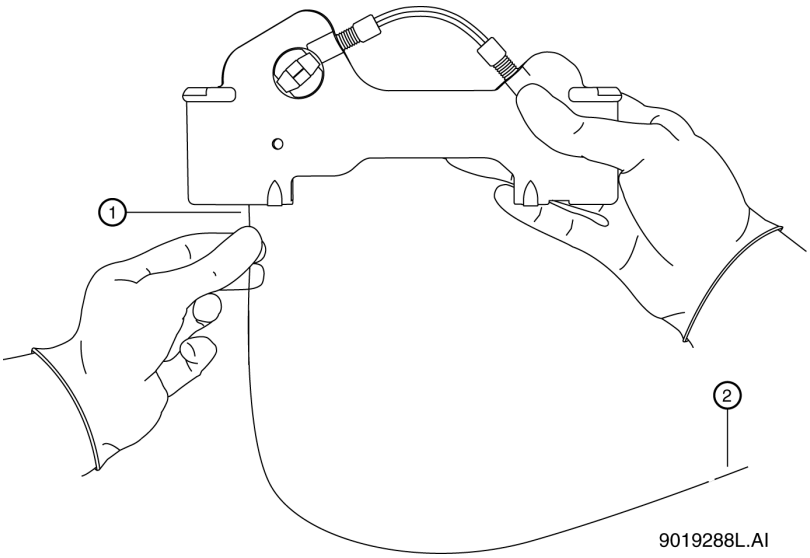

1. Capillary Outlet
2. Capillary Window

8 Carefully push the capillary in through the cartridge outlet until the capillary appears at the cartridge inlet.

9 Pull the capillary through the cartridge from the inlet side until the capillary window appears in the center of the cartridge window (Figure 1.26).

Figure 1.26 Centering Capillary Window in Cartridge Window

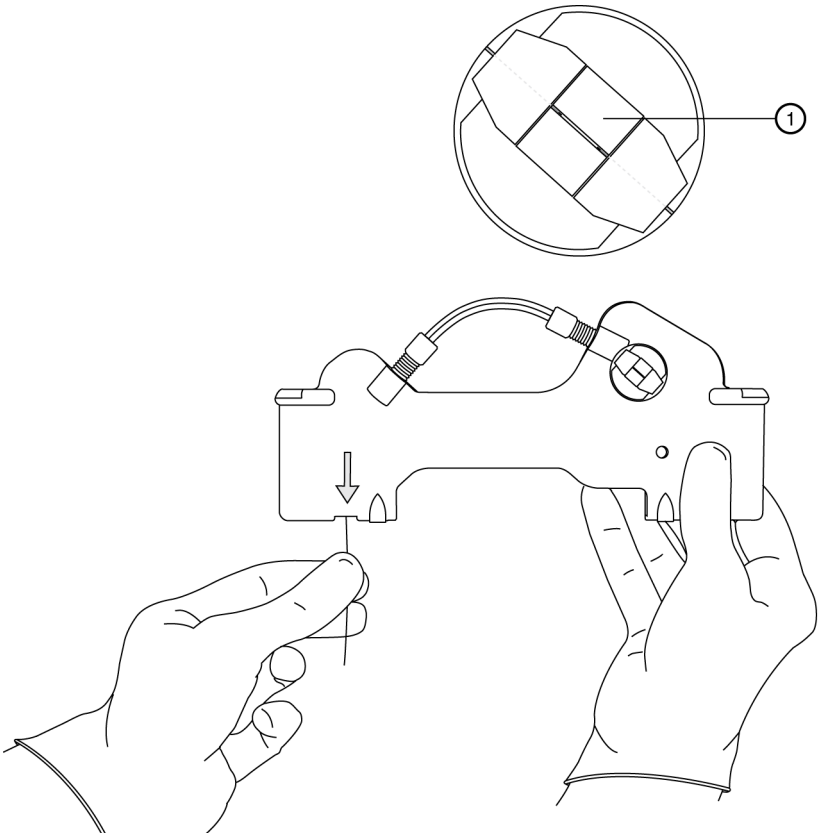

1. Capillary Window

Install the Aperture Clip

IMPORTANT Remove the previous O-ring before you re-install the clip.

1 Select the proper aperture for the application as recommended in the appropriate application guide.

2 From the back side of the cartridge, carefully align the center groove of the aperture clip with the capillary window and press into place (Figure 1.27).

Figure 1.27 Aligning Groove of Aperture Clip with Capillary Window

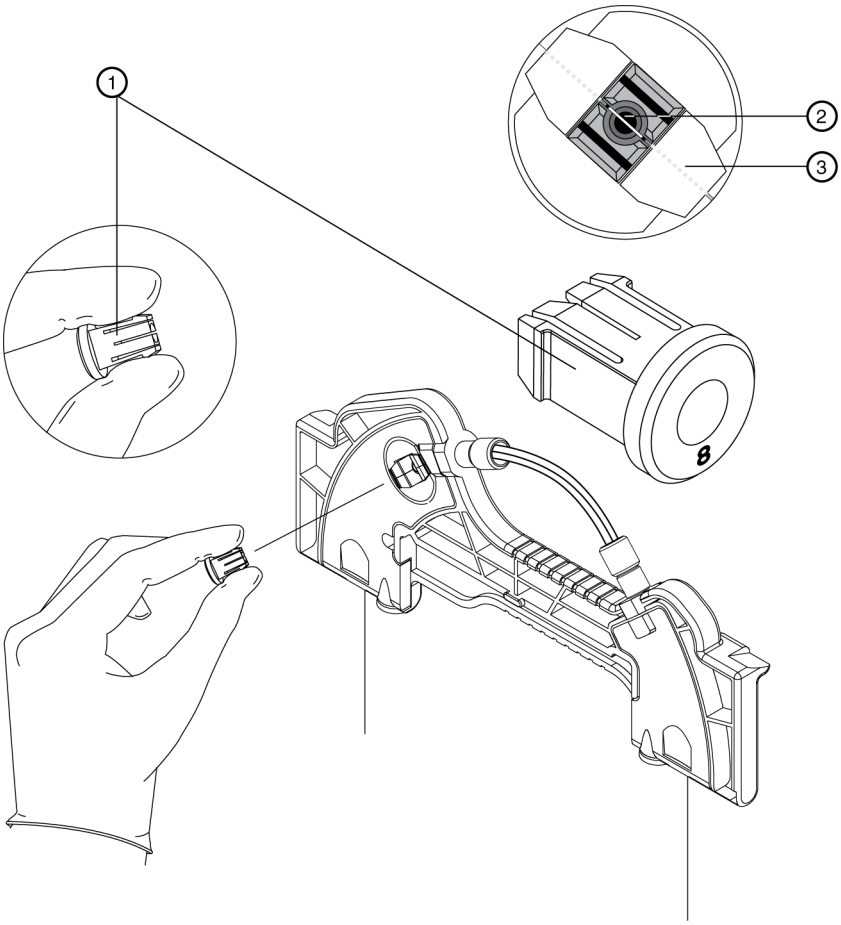

1. Aperture Clip
2. Aperture
3. Capillary

Install the LIF Probe Guide and Probe Retainer

IMPORTANT For LIF detection, use a standard cartridge and in place of the aperture clip, use a probe guide and probe retainer.

1 Carefully install the metal probe guide from the back of the cartridge.

2 Insert the probe retainer so the lock pins snap into the dimples on the probe guide (Figure 1.28).

Figure 1.28 Install the LIF Probe Guide and Probe Retainer

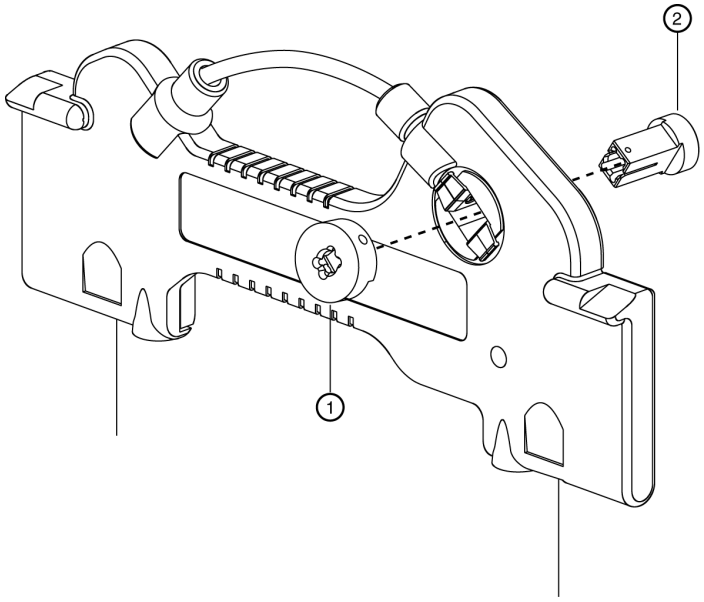

1. Probe Retainer
2. Probe Guide

Install the Seal-Retainer Clips

1 Carefully insert a capillary seal-retainer clip over each capillary end and press to snap into position (Figure 1.29).

NOTE Make sure both the front and back edges of each clip snap into position.

Figure 1.29 Insert the Capillary Seal Retainer Clips

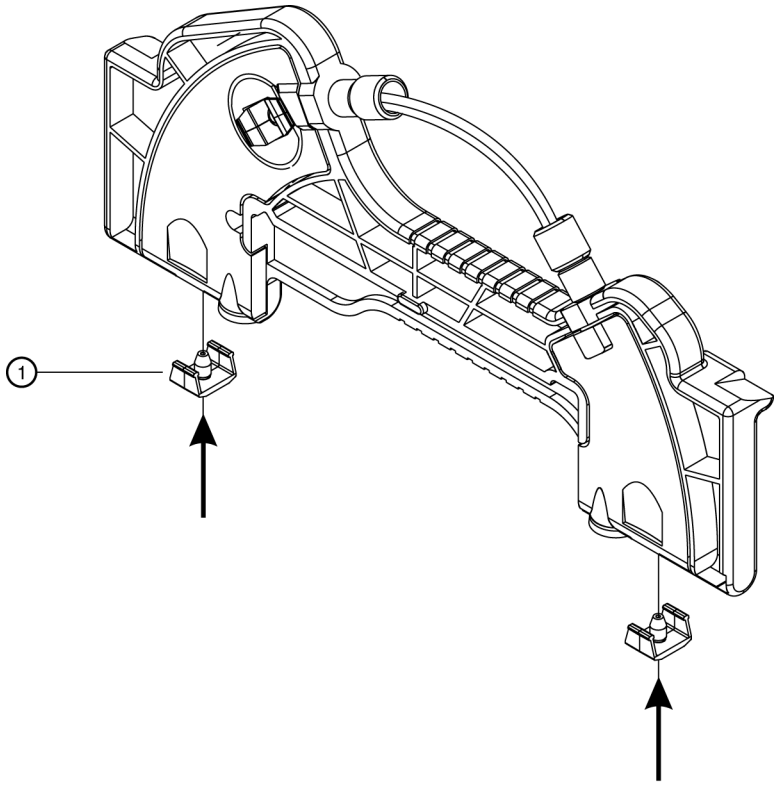

1. Seal Retainer Clips

2 Visually inspect the capillary ends. If they are not straight, remove and reinstall the seal-retainer clips.

Trim the Capillary Ends

IMPORTANT Only trim the capillary when the wet chemistry sample, buffer trays, and sequence are ready and the instrument is ready to run. After you cut the capillary, store the cartridge so the protruding capillary ends are in a solution as recommended in the appropriate application guide.

1 Position the cartridge face down against the capillary-length template (Figure 1.30).

Figure 1.30 Trim the Capillary

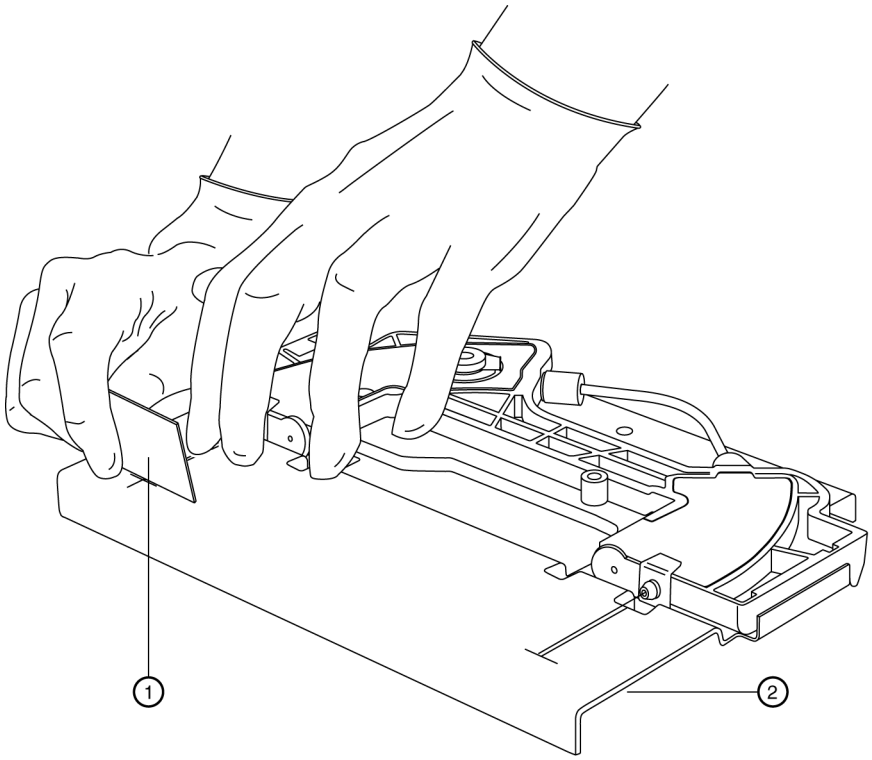

1. Cleaving Stone
2. Template

2 Align the measurement mark on the inlet-side capillary end just below the score line on the capillary-length template.

IMPORTANT Make sure the capillary end is straight between the two lines on the template.

⚠ CAUTION

Be sure to wear safety glasses when cleaving and breaking the capillary. Capillary ends are sharp; handle them with care.

IMPORTANT Do not saw back and forth with the cleaving stone.

3 While you hold the capillary against the template, score the inlet end of the capillary at the template cross-mark. Hold the cleaving stone at a 30° angle when scoring.

NOTE Make sure to cut the measurement mark off the capillary.

4 Remove the excess inlet capillary without bending the capillary.

5 Align the measurement mark on the outlet-side capillary end to just below the score line on the capillary-length template.

IMPORTANT Make sure the capillary end is straight between the two lines on the template.

⚠ CAUTION

Be sure to wear safety glasses when cleaving and breaking the capillary. Capillary ends are sharp; handle them with care.

IMPORTANT Do not saw back and forth with the cleaving stone.

6 While you hold the capillary against the template, score the outlet end of the capillary at the template cross-mark. Hold the cleaving stone at a 30° angle when scoring.

NOTE Make sure to cut the measurement mark off the capillary.

7 Remove the excess outlet capillary without bending the capillary.

8 Inspect the capillary ends with a magnifying lens to ensure they are smooth and not jagged. Figure 1.31 shows a smooth cut 1 and jagged cuts under 2. Only cut 1 is acceptable.

Figure 1.31 Capillary Cuts

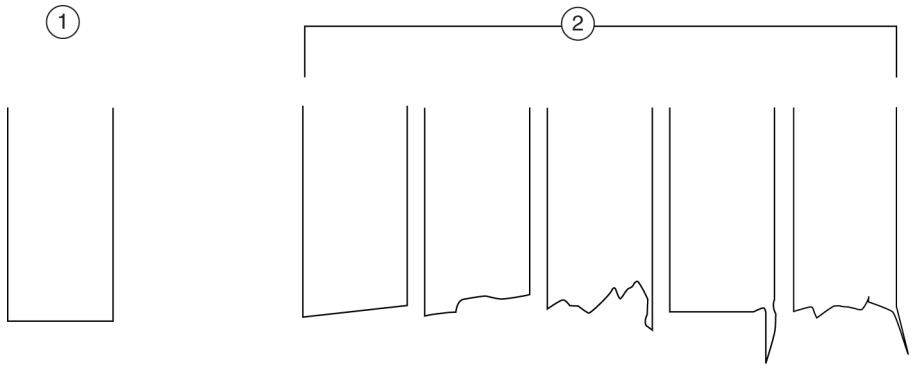

1. Acceptable Cut
2. Unacceptable Cuts

9 To smooth the capillary ends, burnish them with the rough side of the cleaving stone. Repeat inspection and burnishing until the ends are smooth.

10 Wipe the ends of the capillary with Methanol and then with deionized water to remove any traces of ink and debris.

Install the O-Ring

1 From the front side of the cartridge, place the retainer O-ring in the aperture clip hole.

NOTE Use an O-ring only with 100 x 200 and 100 x 800 apertures. Do not use an O-ring with the LIF probe guide.

WARNING

The O-ring must lie flat on top of the capillary window.

2 With the O-ring insertion tool, carefully press the tool until the O-ring seats in the aperture clip (Figure 1.32).

Figure 1.32 Seat the O-ring in the Aperture-Clip Hole (Front View)

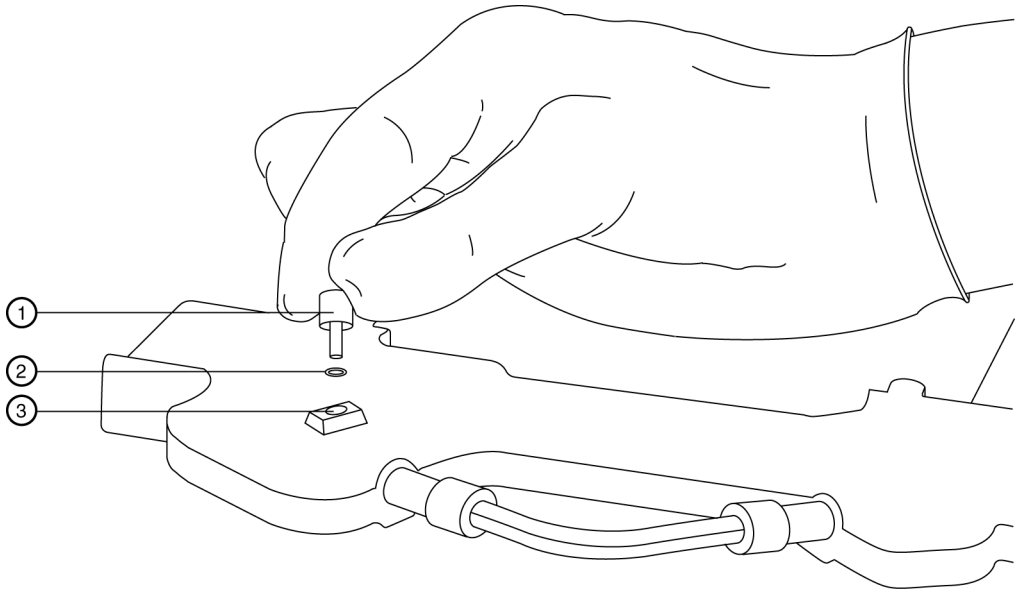

1. Insertion Tool
2. O-ring
3. Aperture Clip Hole

3 The cartridge is now ready for use.

NOTE For capillary equilibration and storage conditions, please consult the appropriate application guide.

Install a Capillary Cartridge into the PA 800 Plus System

Before starting the cartridge installation, you must have a fully assembled capillary cartridge, which includes an installed capillary.

Capillary Cartridge Installation

1 Lift the outer door and the cartridge cover door at the front of the PA 800 Plus system. Refer to Figure 1.33 and Figure 1.34.

Figure 1.33 Cartridge Cover Door

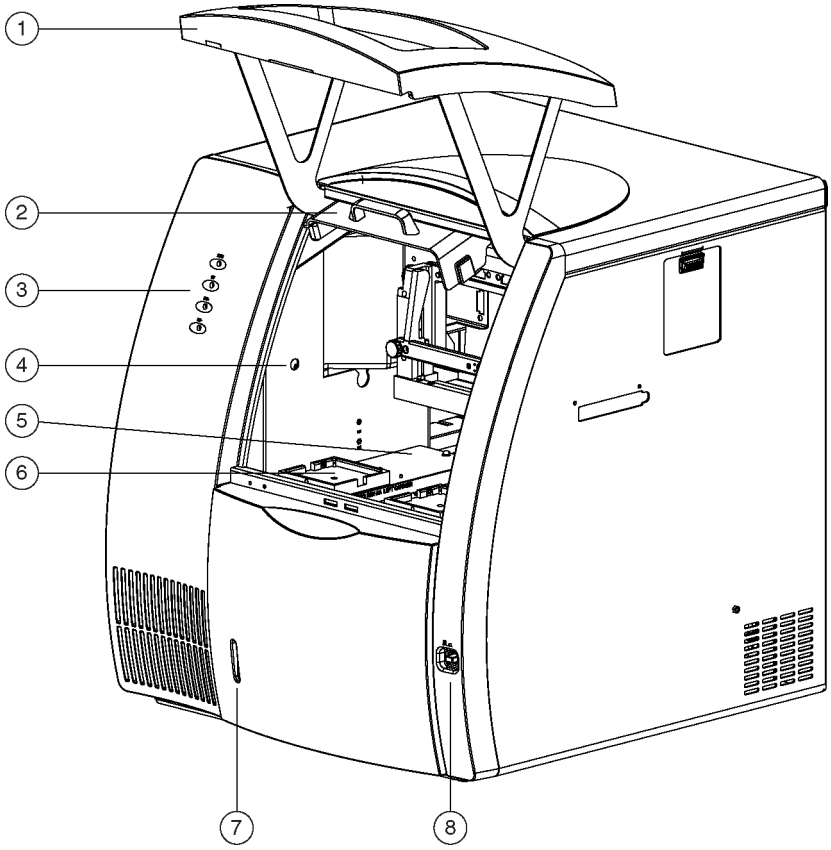

1. Outer Door or Sample Cover Door
2. Inner Door or Cartridge cover Door
3. Indicators
4. Fluid Fill Port
5. Sample Trays
6. Buffer Trays
7. Fluid Bubble Indicator
8. Power Switch

Figure 1.34 Interface Block

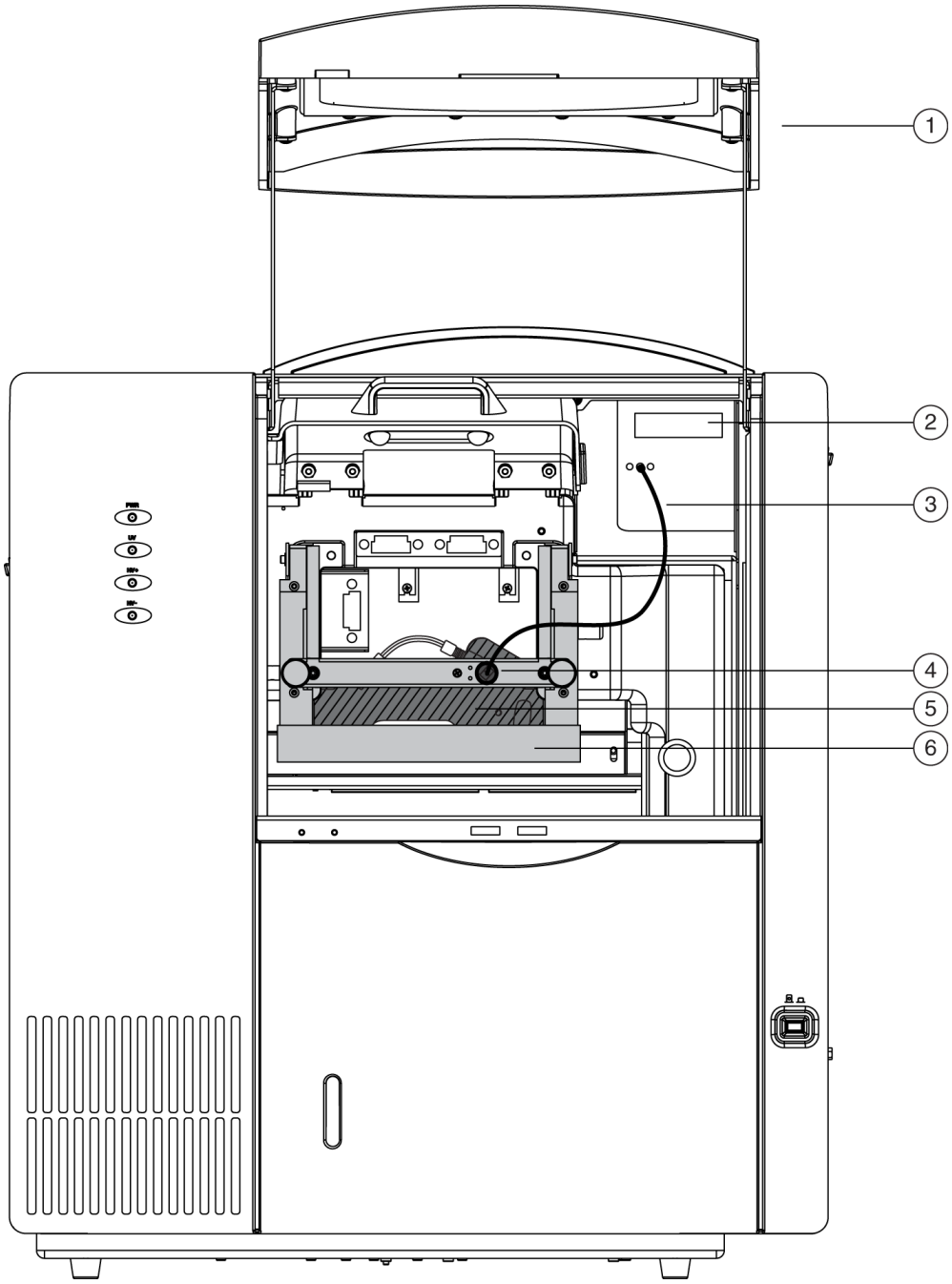

1. Outer Door or Sample Cover Door
2. Detector
3. Two-ended Fiber Optic Cable
4. Clamp Bar
5. Capillary Cartridge
6. Interface Block

2 Loosen the knobs and lift the clamp bar.

3 Position the capillary cartridge over the cartridge interface block and carefully lower the cartridge into position.

4 Lower the clamp bar and tighten the knobs.

5 Lower the cartridge cover door.

NOTE To ensure correct performance, replace the capillary cartridge aperture after three months of use. Refer to Rebuild a Capillary Cartridge.

Universal Vials and Caps

NOTE When you fill the universal vials, some important items to remember are:

- Vial caps must be clean and completely dry before each use.
- Never reuse vial caps.
- Do not overfill vials. An over-full vial sometimes causes hydrostatic pressure, which pushes liquid into the pressure lines.
- Do not under-fill the vial or let the liquid level become too low. Low liquid level in separation vials can cause poor separations.

Fill the Universal Vials

Required Materials

- Universal vials
- Universal vial caps

1 Fill the universal vials as shown in Figure 1.35. For the fill volume. Refer to the appropriate application guide. Do not put more than 1.7 mL in a vial.

Figure 1.35 Universal Vials

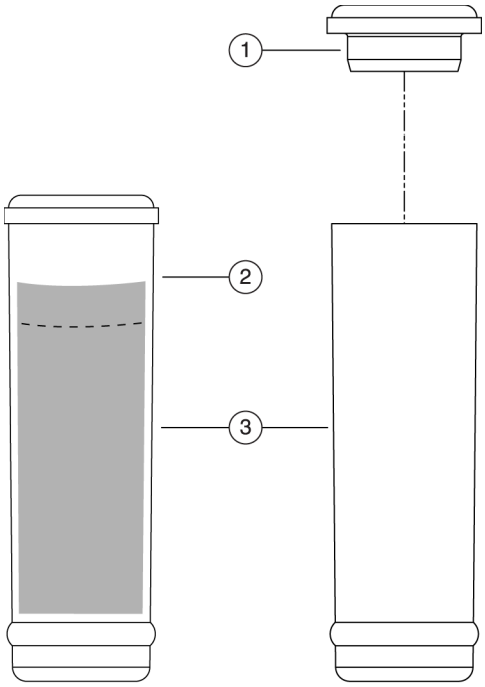

1. Universal Vial Cap
2. Maximum Fill Level
3. Universal Vials

2 Put the cap on the vial and press it into position.

Fill the Micro Vials

Required Materials

- Micro vials
- Universal vials
- Universal vial caps

1 Using care as not to introduce any bubbles, fill the micro vial with at least 100 µL of sample (Figure 1.36).

Figure 1.36 Micro Vials

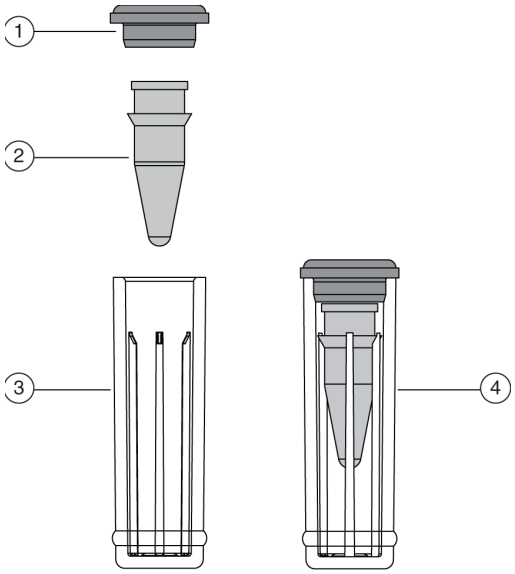

1. Universal Cap
2. Micro Vial
3. Universal Vial
4. Micro Vial inside Universal Vial

2 Place the micro vial in the universal vial.

3 Put the cap on the universal vial.

4 Put the capped vial in the tray.

NOTE Very small samples can evaporate into the space inside the micro vial holder. (The micro vial holder is the built-in plastic support structure that secures the micro vial inside the universal vial.) You minimize this result by placing 200 µL of water in the bottom of the universal vial.

CHAPTER 2

Maintenance Procedures

Maintenance Procedures

This section contains the following maintenance procedures:

- Opening Levers, Electrodes, and the Interface Block
- Coolant
- Fiber Optics (UV and PDA Detectors)
- Lamp
- Instrument Care

Specifically covered are the removal and replacement of electrodes and opening levers and the cleaning of the electrodes, opening levers, and the interface block. Refer to Opening Levers, Electrodes, and the Interface Block.

WARNING

Disconnect the power before any instrument disassembly. Failure to do so can cause electrical shock or other injury.

WARNING

Maintenance or repair procedures not specifically described in this guide present a risk of electrical shock or injury. Refer additional servicing to SCIEX.

WARNING

Do not attempt to defeat any of the instrument interlocks or safety mechanisms.

Opening Levers, Electrodes, and the Interface Block

Remove and Replace Opening Levers

1. Use **Direct Control** to move the trays to the load position.
2. Lift the cartridge cover door.
3. Loosen the two thumb screws and lift the clamp bar.
4. Remove the capillary cartridge from the interface block.
5. If the trays are still in your way, remove them for access to both opening levers.
6. Remove an opening lever by grasping it with both hands and pulling down firmly. Refer to Figure 2.1. Repeat for second lever.

Figure 2.1 Interface Block, Electrodes, and Opening Levers

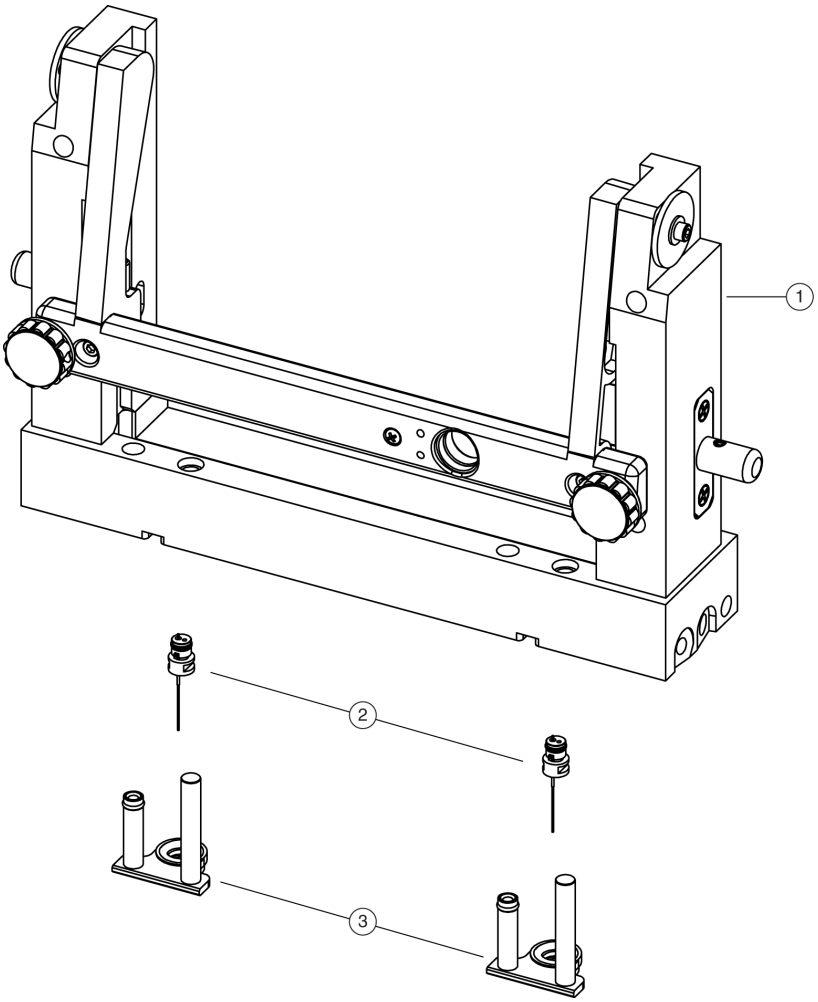

1. Interface Block
2. Electrodes
3. Opening Levers

⚠ CAUTION

Do not place fingers directly below the electrodes when installing opening levers. Electrode ends are sharp; handle them with care.

7 Install an opening lever.

a. Align the O-ring and electrode hole in the lever directly under the electrode. The short cylinder side of the lever should be under the spring.

b. With your fingers on the sides of the lever, press the lever up into the interface block until it snaps into place. Repeat for second lever.

Remove and Replace Electrodes

1 Repeat steps 1 through 6 of Remove and Replace Opening Levers.

2 Remove the electrodes one at a time as shown in Figure 2.2.

Figure 2.2 Remove Electrodes from Interface Block

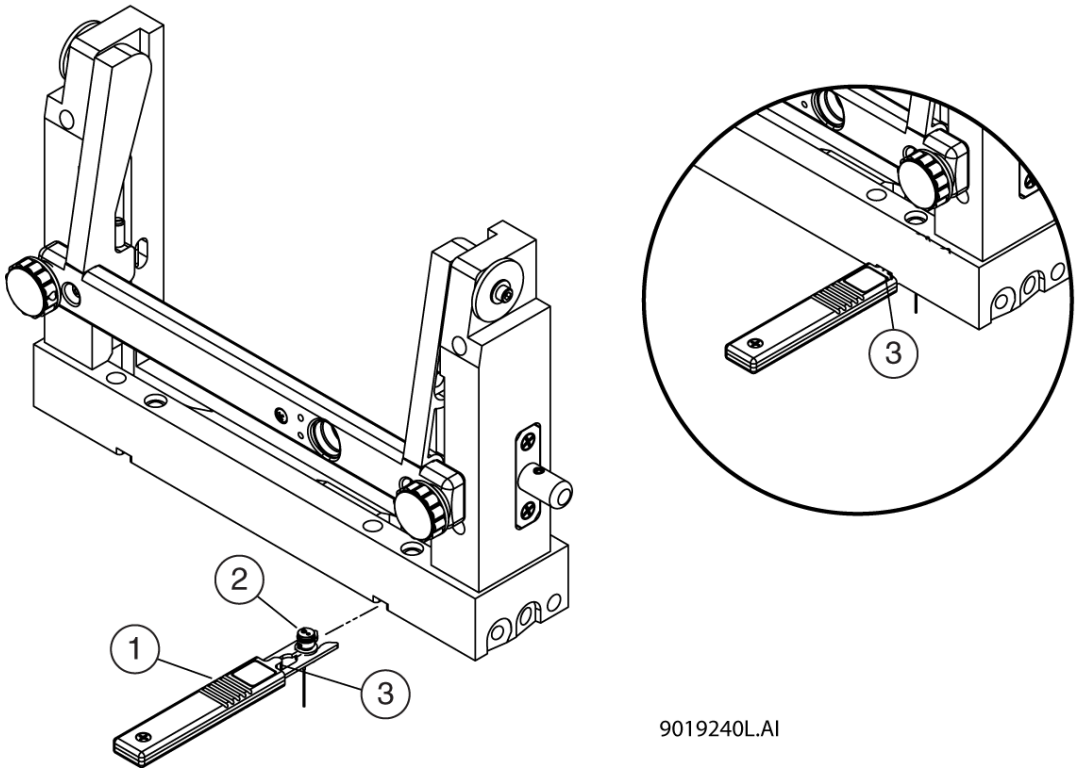

1. Electrode Tool
2. Electrode
3. Nub at end of Electrode Tool Handle

a. Align the electrode tool flush with the bottom of the interface block.

b. Push straight forward under the interface block to capture the electrode in the tool.

c. Make sure the nub at the end of the electrode tool handle fits into the notch on the interface block as shown in the circled area of Figure 2.2.

d. Pry gently upward on the rear of the electrode tool to remove the electrode from the interface block.

e. Remove the electrode from the electrode tool. Repeat for second electrode.

3 Install an electrode into the interface block.

Figure 2.3 Install an Electrode into the Interface Block

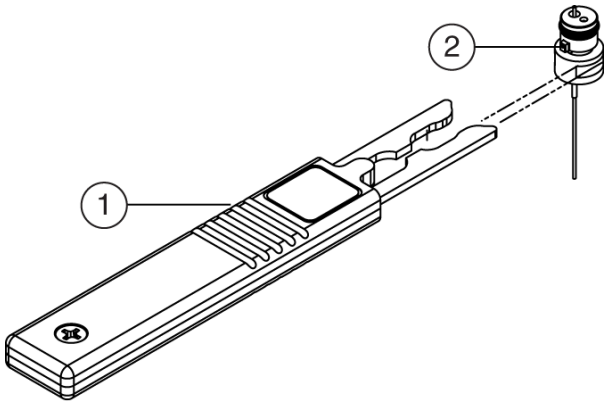

1. Electrode Tool
2. Electrode Key

a. Place an electrode in the tool with the electrode key facing you (Figure 2.3).
b. Align the tool below the notch and parallel to the bottom of the interface block.
c. Press upward to snap the electrode into the interface block.
d. Remove the tool by pulling straight back. Repeat for second electrode.

Clean Electrodes, Opening Levers, and the Interface Block

Required Materials

- Kim Wipes
- Mirror
- Pen Light
- Cotton swabs
- 150 mL of DDI water
- Methanol
- Beaker

1 Repeat steps 1 to 6 of Remove and Replace Opening Levers.

2 Immerse both levers in a beaker containing at least 150 mL of DDI water.

3 Perform steps under Remove the electrodes one at a time as shown in Figure 2.2.

4 Immerse both electrodes in the DDI water with the opening levers.

5 Sonicate these four parts for five minutes.

6 Retrieve the parts and dry them thoroughly with a Kim Wipe.

7 Perform the steps under Install an electrode into the interface block.

⚠ CAUTION

Do not place fingers directly below the electrodes when installing opening levers. Electrode ends are sharp; handle them with care.

8 Perform the steps under Install an opening lever.

9 Use cotton swabs to clean the interface block, electrodes, and opening lever surfaces with water followed by methanol. Allow the interface block, electrodes, and opening lever surfaces to dry.

10 Inspect the interface block using a mirror and pen light. Repeat this process until the interface block is clean.

11 Reinstall the capillary cartridge in the interface block.

12 Lower the clamp bar and tighten the two thumb screws.

13 Close the cartridge cover door.

Coolant

Required Materials

- Capillary Cartridge Coolant (PN 359976)
- 150 mL Syringe
- Coolant Fill Adapter (PN 144647)

1 Open the sample cover (Figure 2.4).

Figure 2.4 Capillary Coolant Installation

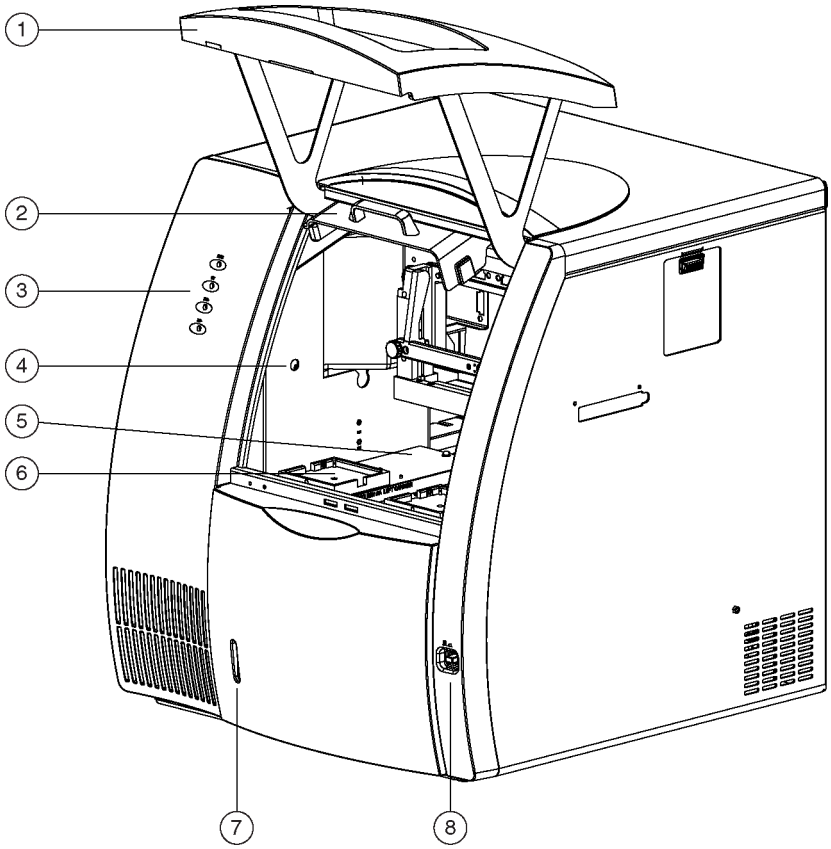

1. Outer Door or Sample Cover (open)
2. Inner Door or Cartridge Cover (open)
3. Indicators
4. Fluid Fill Port
5. Sample Trays
6. Buffer Trays
7. Fluid Bubble Indicator
8. Power Switch

2 Attach the coolant fill adapter to the coolant fill port.

3 Fill the syringe with 120 mL of coolant.

4 Fill the coolant supply until the sight-tube is approximately 75% full.

5 Remove the syringe and close the sample cover.

6 The coolant syringe comes with a plunger. When adding coolant, the plunger should not be used. Gravity supplies enough force to pull the coolant into the system. Using the plunger can introduce too much pressure to the coolant system and can cause damage.

Fiber Optics (UV and PDA Detectors)

Required Materials

- Non-abrasive lens tissue
- Analytical methanol, ethanol, or isopropanol

⚠ CAUTION

Do not touch the fiber optic surface with your fingers as oils from your skin can degrade performance.

1 Use **Direct Control** to move the trays to the load position.

2 Lift the cartridge cover door (Figure 2.5).

Figure 2.5 Location of Fiber Optic Cable

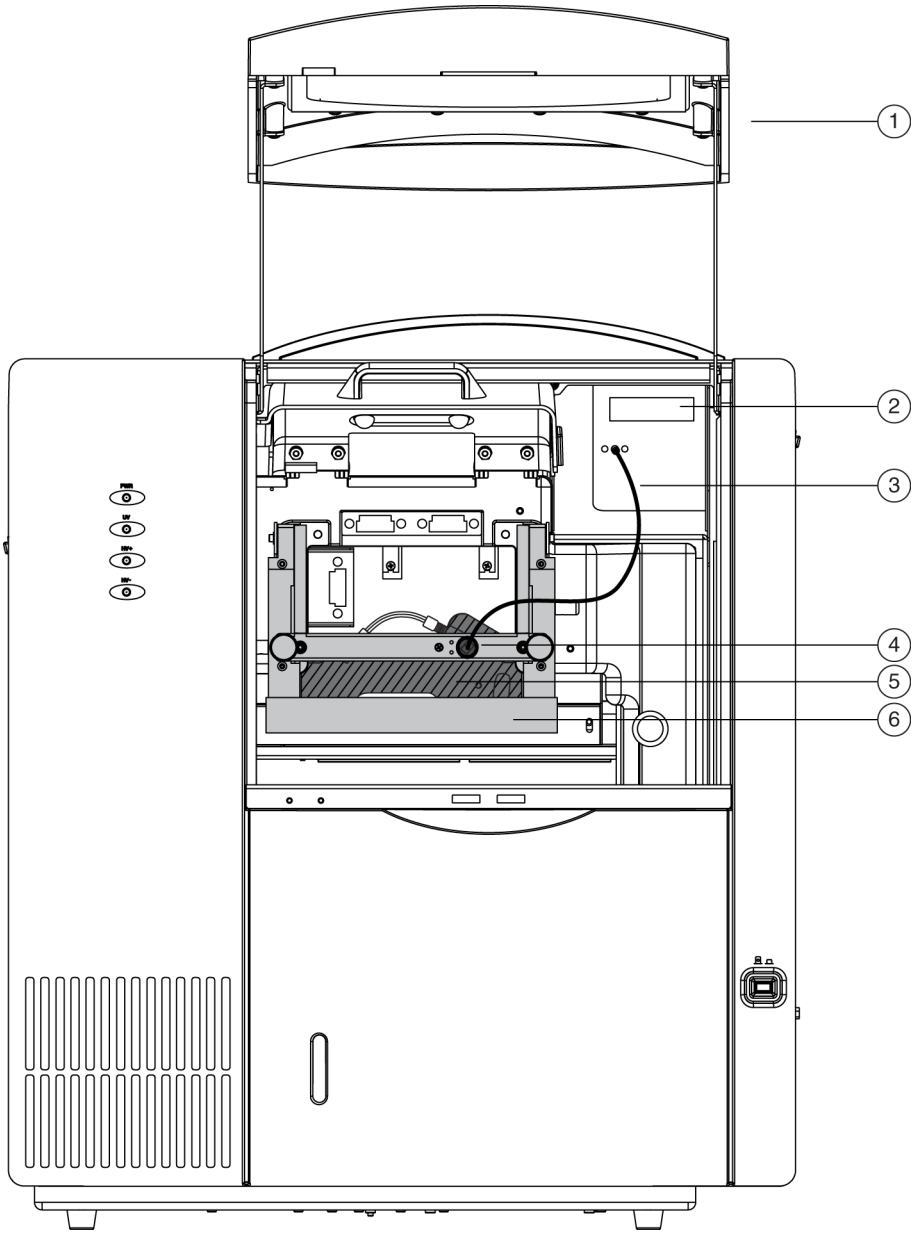

1. Outer Door (open position)
2. UV Detector
3. Two-ended Fiber Optic Cable
4. Clamp Bar and Cable Connection
5. Capillary Cartridge
6. Interface Block

3 Turn the system power off.

4 Loosen the two thumb-screws on the insertion bar and lift the insertion bar.

5 Disconnect the fiber optic cable at the detector.

6 Disconnect the fiber optic cable at the clamp arm.

7 Moisten the lens tissue with alcohol.

8 Clean the surface of each fiber optic cable connector and allow each connector to dry before reconnecting.

9 Reconnect the fiber optic cable at the clamp bar.

10 Reconnect the fiber optic cable at the detector.

11 When all fiber optic cable connectors are cleaned and reconnected, close the cartridge cover door.

Lamp

If the baseline is excessively noisy or the lamp will not strike, the lamp may need replacement. The following procedure describes how to change the lamp.

Required Materials

- Deuterium lamp
- 7/64 inch hex head wrench

WARNING

If the PA 800 Plus instrument has been on for any length of time, the deuterium lamp will be very hot. To prevent burning your fingers, allow the lamp to cool before replacing.

1 Use **Direct Control** to move the trays to the load position.

2 Lift the cartridge cover door. Refer to Figure 2.6 and Figure 2.7.

Figure 2.6 How to Change the Lamp

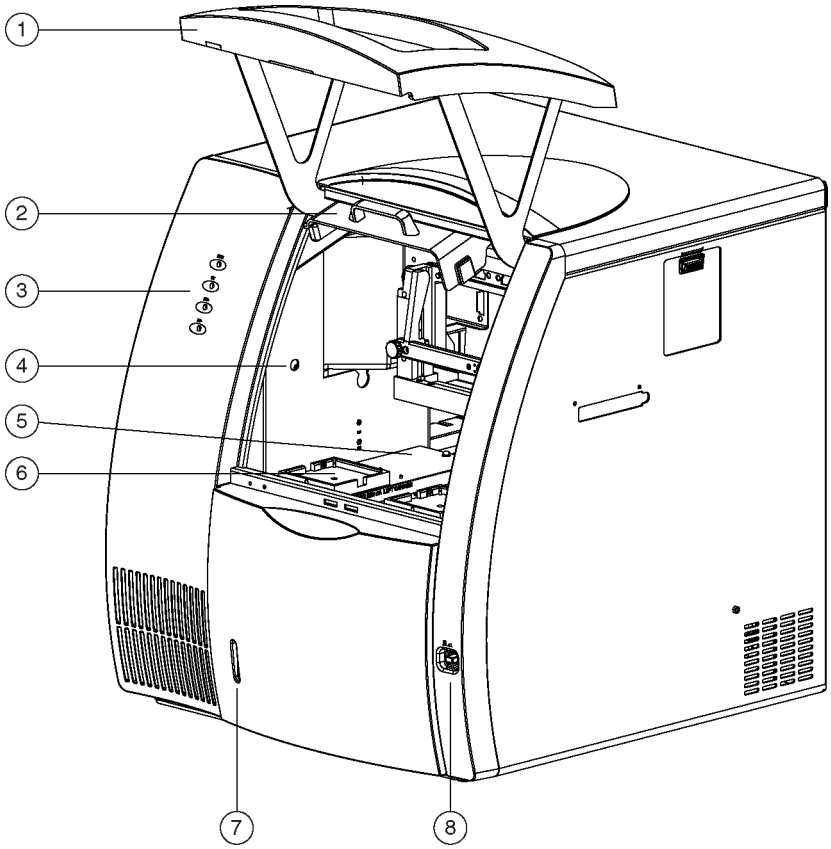

1. Outer Door or Sample Cover (open)
2. Inner Door or Cartridge Cover (open)
3. Indicators
4. Fluid Fill Port
5. Sample Trays
6. Buffer Trays
7. Fluid Bubble Indicator
8. Power Switch

Figure 2.7 Capillary Cartridge Door

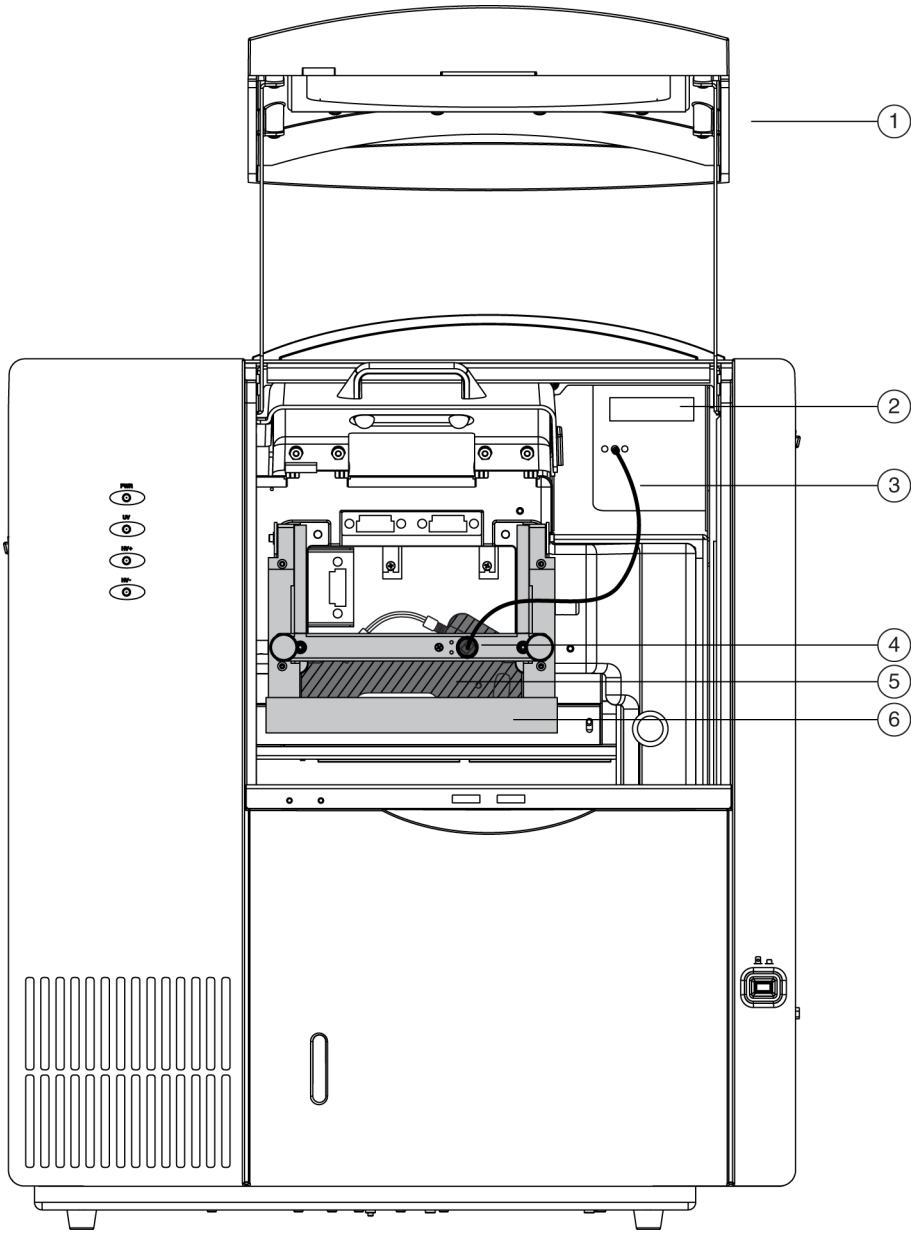

1. Outer Door (open position)
2. UV Detector
3. Two-ended Fiber Optic Cable
4. Clamp Bar and Cable Connection
5. Capillary Cartridge
6. Interface Block

3 Turn the system power off and allow enough time for the lamp to cool.

4 Loosen the two thumb-screws on the clamp bar and lift the bar.

5 Remove the capillary cartridge from the interface block.

6 Loosen the two thumb screws and remove the optics source assembly. Refer to Figure 2.8. To remove, pull the assembly forward. Put the assembly on a clean work surface.

Figure 2.8 How to Remove the Optics Assembly

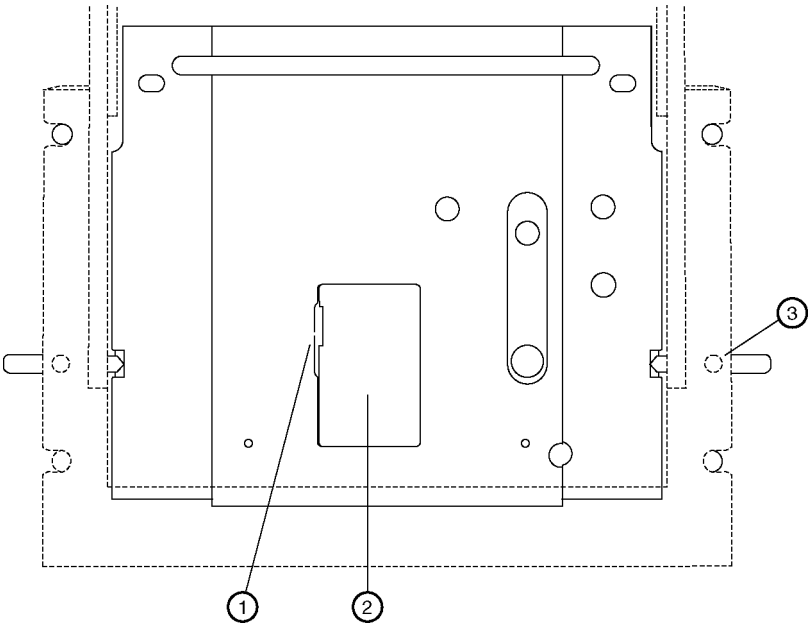

1. Access Door Catch
2. Access Door
3. Thumb screws (one on each side)

7 Open the deuterium lamp access cover on the back of the optics source assembly. Disconnect the lamp power plug. Refer to Figure 2.9.

Figure 2.9 How to Disconnect the Lamp Power Plug

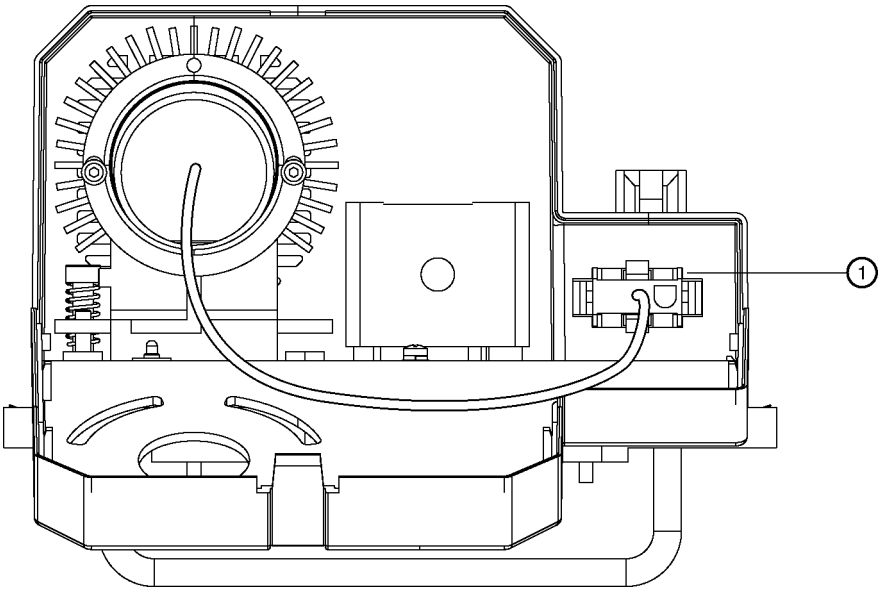

1. Power Plug

8 Using a 7/64 inch hex head wrench, remove the two hex screws securing the deuterium lamp. Remove the lamp from the lamp housing.

⚠ CAUTION

Do not touch the envelope of the lamp as oils from your skin can damage the lamp.

⚠ CAUTION

Make sure an orange O-ring is installed on the lamp flange before you install the lamp. A missing O-ring decreases lamp performance.

9 Install the new deuterium lamp by aligning the flange guide notch in the lamp with the housing guide pin.

10 Install the two hex screws and tighten until snug.

11 Reconnect the power plug and close the deuterium lamp access cover.

12 Put the optics source assembly in the mounting location. Align the two upper guide pins and tighten the two thumb screws.

13 Reinstall the capillary cartridge in the interface block.

14 Lower the clamp bar and tighten the two thumb screws.

15 Close the cartridge cover door.

16 Turn on the power.

17 Start the 32 Karat software.

18 Select **Diagnostics** from the Instrument control menu. The PDA (PDA detector installed) or UV (UV detector installed) diagnostic dialog opens. Refer to Figure 2.10 and Figure 2.11.

Figure 2.10 PDA Diagnostics Dialog

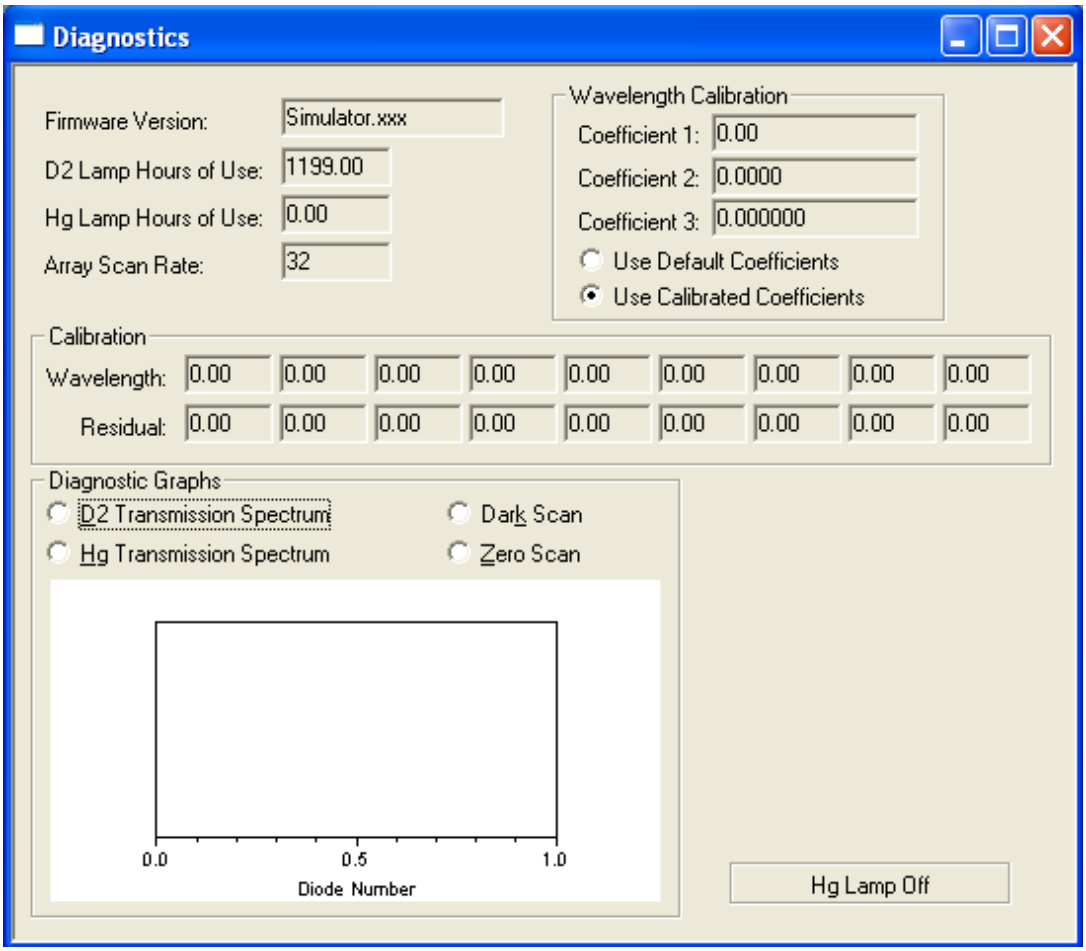

Figure 2.11 UV Diagnostics Dialog

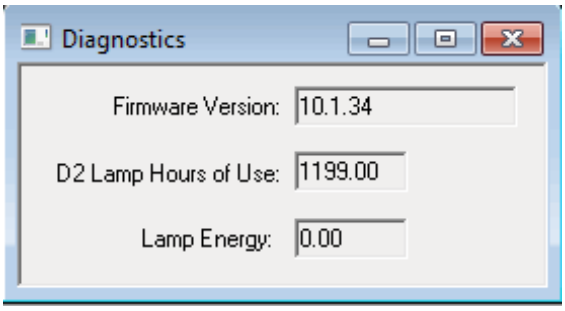

19 Select **Control** > **Diagnostics** > **Set Lamp Hours**. The Lamp Hours of Use dialog opens (Figure 2.12).

Figure 2.12 Lamp Hours of Use Display Dialog

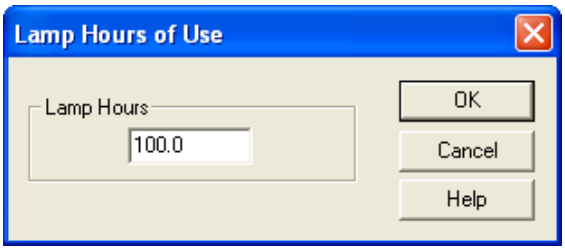

20 In **Lamp Hours**, enter a value of **0**.

21 Select **OK**.

Instrument Care

LIF Care and Maintenance

WARNING

The SCIEX 488 nm laser module emits laser light that can cause serious damage to the eyes. Servicing of the laser should be done only by a SCIEX Field Service Representative.

Inspect the LIF

The LIF detector system is designed to prevent laser light exposure outside the laser box, fiber cable, and detector. To make sure the laser light is contained, regularly check the following parts of the system.

- Visually inspect the full length of the fiber optic cable to make sure it is in good condition.
- Visually inspect the laser module housing to verify that no panels are loose. Loose panels can allow dangerous access to laser energy inside the module.
- Verify operation of the interlock.

CAUTION

If the interlock is defeated, potentially harmful laser power of up to 3 mW can be accessible in the interior or can be emitted from the fiber optic cable.

How to Clean the LIF

The outside surfaces of the detector and laser module can be cleaned by wiping with a clean, damp cloth. If necessary, a mild detergent can be used. Wipe the outside surfaces with a soft, dry cloth after cleaning.

The filters are delicate optical components that must be protected from dirt, dust, and fingerprint contamination. When installed in the filter housing, the filters are protected from contamination and normally do not require cleaning. Due to the risk of damaging a filter during the cleaning process, DO NOT clean a filter unless it is dirty enough to affect system performance.

How to Store the LIF

When the LIF is not in use, install the probe in the Probe Holder on the 488 nm laser module. This gives a mechanical protection for the probe and shields it from dust and other particles.

Replace the Quad-Rings

If coolant is leaking between the interface block and cartridge, the quad-rings might require replacement. The following procedure describes how to change the quad-rings. You must have new quad-rings to do the replacement.

How to Replace the Quad-Rings

1. Use **Direct Control** to move the trays to the load position.
2. Lift the cartridge cover door.
3. Loosen the two thumb screws and lift the clamp bar.
4. Check cartridge coolant tubing connections for leaks.
5. Remove the capillary cartridge from the interface block.
6. Find the quad-rings in the interface block. Use the thumbnail and forefinger to remove the quad rings.
7. Install the new quad-ring in the quad-ring recess of the interface block.
8. Reinstall the capillary cartridge in the interface block.
9. Lower the clamp bar and tighten the two thumb screws.
10. Close the cartridge cover door.

Replace the Fuses

⚠ CAUTION

It is important to find the cause of fuse failure before you replace the fuses.

⚠ CAUTION

Make sure to replace the fuses with the correct type and rating for continued protection against risk of fire and/or improper instrument operation.

⚠ CAUTION

If the fuses continue to blow after being replaced, contact SCIEX Field Service Representative for additional assistance

Required Materials

- Flat-tip screwdriver, #2
- Replacement fuses (as required)

How to Replace the Fuses

1 Turn off instrument power and disconnect the power plug from the AC power outlet.

2 Using the flat-tip screwdriver, remove the fuse block (Figure 2.13).

Figure 2.13 Replacing Fuses

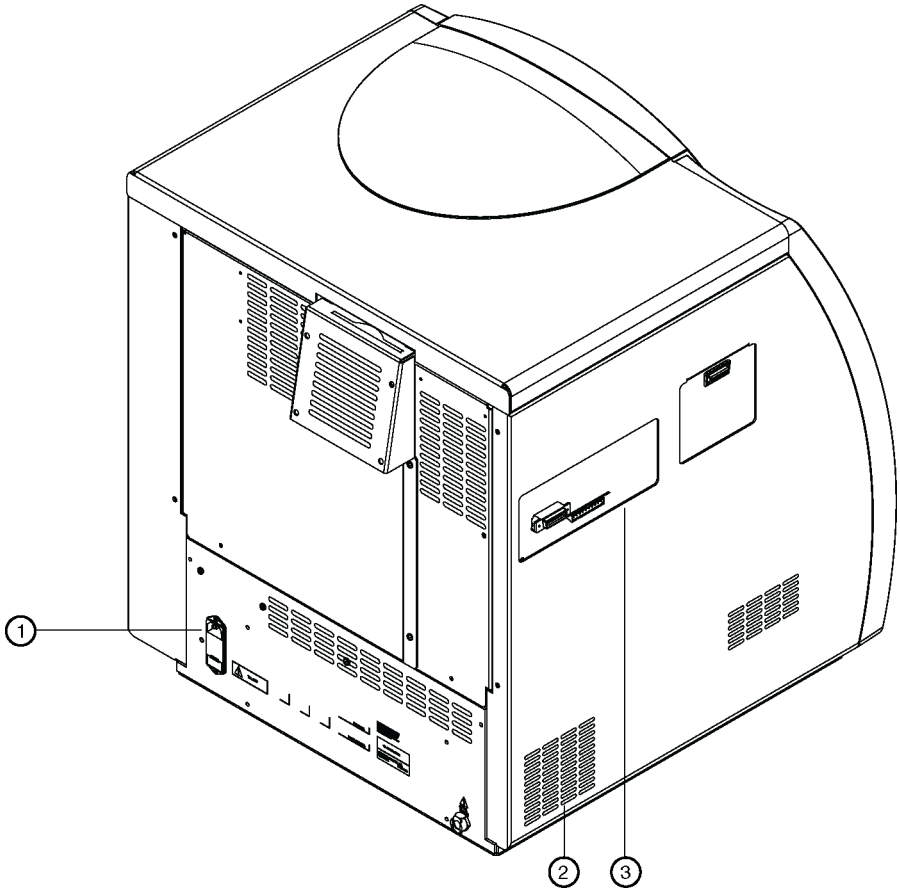

1. Fuse Block
2. Air Conditioning Vents
3. External Connections Panel

3 Replace the fuses:

Table 2.1 Fuse Type and Rating

Line Voltage	100 VAC - 120 VAC	200 VAC - 240 VAC
Fuse Type and Rating	8.0 A Slow Blow; ¼ inch (2 ea.)	6.3 A Time Delay; 20 mm (2 ea.)

4 Reinstall the fuse block and reconnect the power cable.

CHAPTER 3

Connect the System to a Mass Spectrometer

CE-MS/MS Mode Cartridge Procedures

In CE-MS mode, the coolant tubing and capillary extend outside the PA 800 Plus instrument to the External Detector Adapter (EDA) block. The EDA block is a device that allows the capillary to exit the PA 800 Plus instrument and supplies a return path for the capillary coolant. The EDA block can be used with the standard cartridge. When you use this device, special coolant tubing is required.

The standard cartridge accommodates capillaries with an external diameter of 375 µm and allows use of the PA 800 Plus system detector. The length to the PA 800 Plus system detector with this cartridge is approximately 10 cm.

⚠ WARNING

To prevent the risk of electric shock, when the high voltage is turned on do not touch the capillary.

⚠ WARNING

The end of the capillary is a sharp object. To prevent the risk of injury, handle the capillary with care when inserting it into the cartridge, when handling the cartridge, and when attaching external devices.

This section describes cartridge procedures for the CE-MS/MS Mode in which the Standard Cartridge is used to host the capillary inlet and the capillary outlet is terminated at the MS Detector.

The cartridge procedures for CE-MS/MS Mode are as follows:

- Install the Capillary in the Standard Cartridge

Install the Capillary in the Standard Cartridge

Figure 3.1 Standard Cartridge

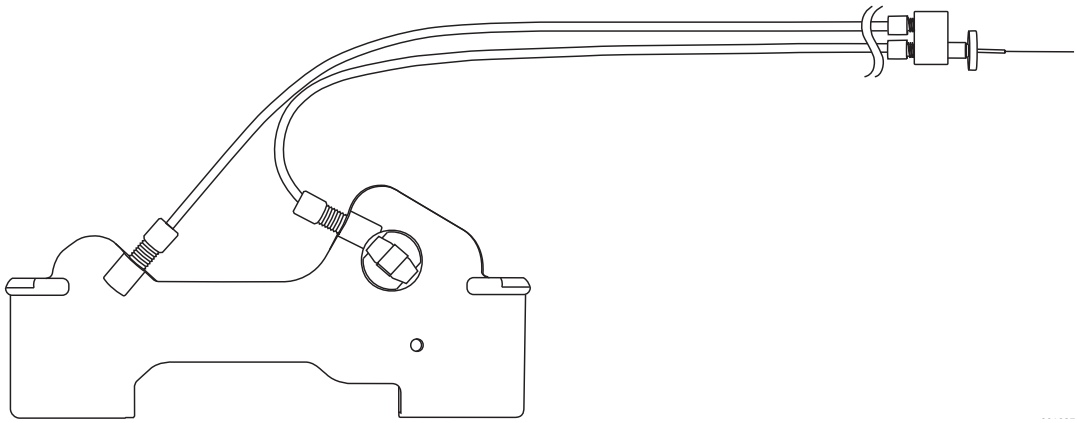

1. Prepare a 1 meter capillary with a window at 15 cm from one end.
2. Remove the clip and double seal from the bottom of the cartridge on the aperture side.
3. Remove the nut and seal from the CE/MS-MS coolant adapter.
4. Remove the coolant tubing nut at the aperture side of the cartridge and remove the coolant tubing from the cartridge. Verify that the coolant O-ring is removed from the cartridge.
5. Hold the capillary at the end farthest from the window. Insert this end of the capillary into the bottom of the cartridge and push the capillary in through the aperture and out through the top of the cartridge.
6. Pull the capillary out from the top of the cartridge until the window is centered in the aperture.
7. Inspect the aperture to verify the O-ring is not installed. If it is present, remove it. Install the aperture by pressing it in squarely from the back side of the cartridge.
8. Install the double seal and clip over the capillary and onto the cartridge.
9. Trim the capillary at the bottom of the cartridge using the trimming template and cleaving stone.

   NOTE Do not trim the long end of the capillary now.

10 Put the nut, ferrule, and O-ring on the coolant tubing.

11 Feed the long end of the capillary through the coolant tubing until the capillary emerges from the CE/MS-MS coolant adapter.

12 Insert the coolant tubing into the cartridge until the tubing is completely seated. Make sure the O-ring stays centered on the end of the coolant tubing and finger-tighten the nut into the cartridge. Do not over-tighten the nut.

13 Install the cartridge into the instrument.

14 Tighten the coolant nut into the coolant adapter.

15 Adjust the capillary so the minimum amount of capillary is exposed from the end of the interface.

16 Remove approximately 2 mm of polyimide coating from the outside of the capillary.

17 Install the configured cartridge. Swing open the access door and install the configured cartridge through the slot in the right side of the PA 800 Plus instrument and into the interface block. Guide the coolant tubes through the slot in the right-side upright. Refer to Figure 3.2.

Figure 3.2 How to Guide the Coolant Tubes Through the Slot

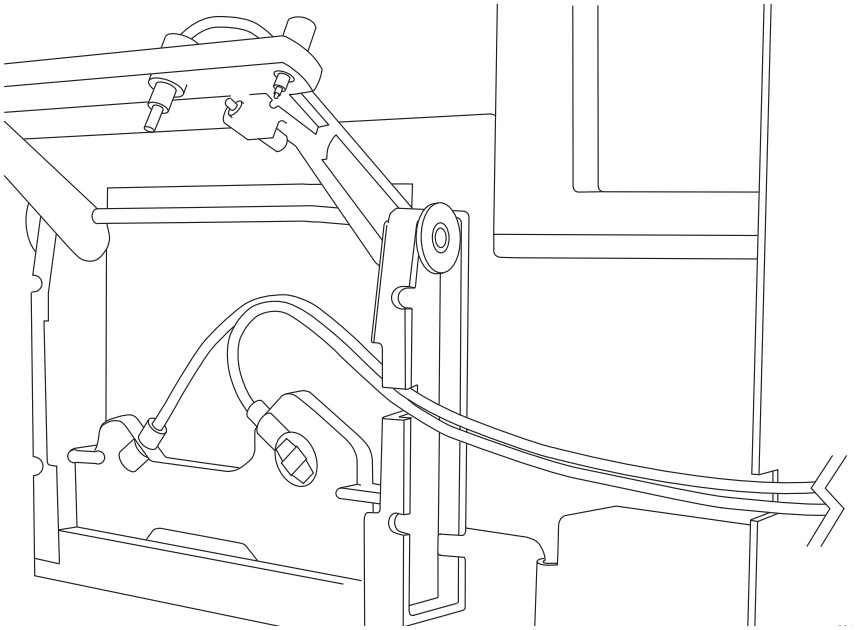

18 Lower the clamp bar and tighten the screws.

19 Insert the capillary adapter body into the slot in the right side of the PA 800 Plus instrument. Secure the capillary adapter with the locking ring.

20 Slide the door closed, then close the cartridge cover door and the outer door.

Ground Connection

A ground connection is provided on the PA 800 Plus instrument for additional safety. A grounding cable runs from the chassis of the MS system to the banana jack on the right side of the PA 800 Plus instrument.

APPENDIX A

LIF Test Mix Calibration and Performance Tests

LIF detection differs from absorbance detection in some important ways. An absorbance detector measures a small intensity difference in a high-intensity light source. This is an effective technique because the percentage of light does not change as the source light intensity changes. This means peak response for a sample remains constant as the lamp ages or when a lamp is changed. With LIF detection, low light intensity is measured from a dark background. These low intensities are more easily influenced by changes in the optical path. A calibration can be performed to correct for these influences by using a SCIEX-supplied test mix. For this example, the environment is LIF calibration using the 488 nm laser with fluorescein.

Relative Fluorescent Units (RFU)

LIF detection systems are prone to give different response as changes are made in the optical path. This means a sample of known concentration can yield different results after a capillary is changed or if the separation is run on a different instrument. Due to this uncertainty, LIF detector response is annotated in units of Relative Fluorescent Units (RFU) as opposed to lumens or another unit of light energy. This is generally acceptable for capillary electrophoresis detection provided you can associate a sample concentration with a detector response.

To provide performance specifications for the LIF detector, it was necessary to develop a fluorescent test mix solution. 1×10^{-7} M fluorescein and sodium salt in water was chosen for the performance test mix.

Calibration Correction Factor (CCF)

Several different LIF systems were used to establish an expected response value for the LIF test mix. For the performance test capillary (60 cm total length, 75 µm bare-fused silica), the expected detector response was determined to be 35. Most of the systems tested were within ± 10% of this value.

To correct for this variability, a calibration correction factor (CCF) can be calculated for each system as follows:

CCF = 35/M; where Expected response (Target) = 35 and Measured response = M

Applying the CCF

In the 32 Karat software Instrument Configuration dialog, LIF calibration is available for systems with LIF detection. To access the LIF calibration wizard, open the LIF instrument configuration. (Right-click on instrument, select configuration, select appropriate instrument type, and double-click LIF detector icon in right pane).

Figure A.1 PA 800 Plus System Instrument Configuration Dialog

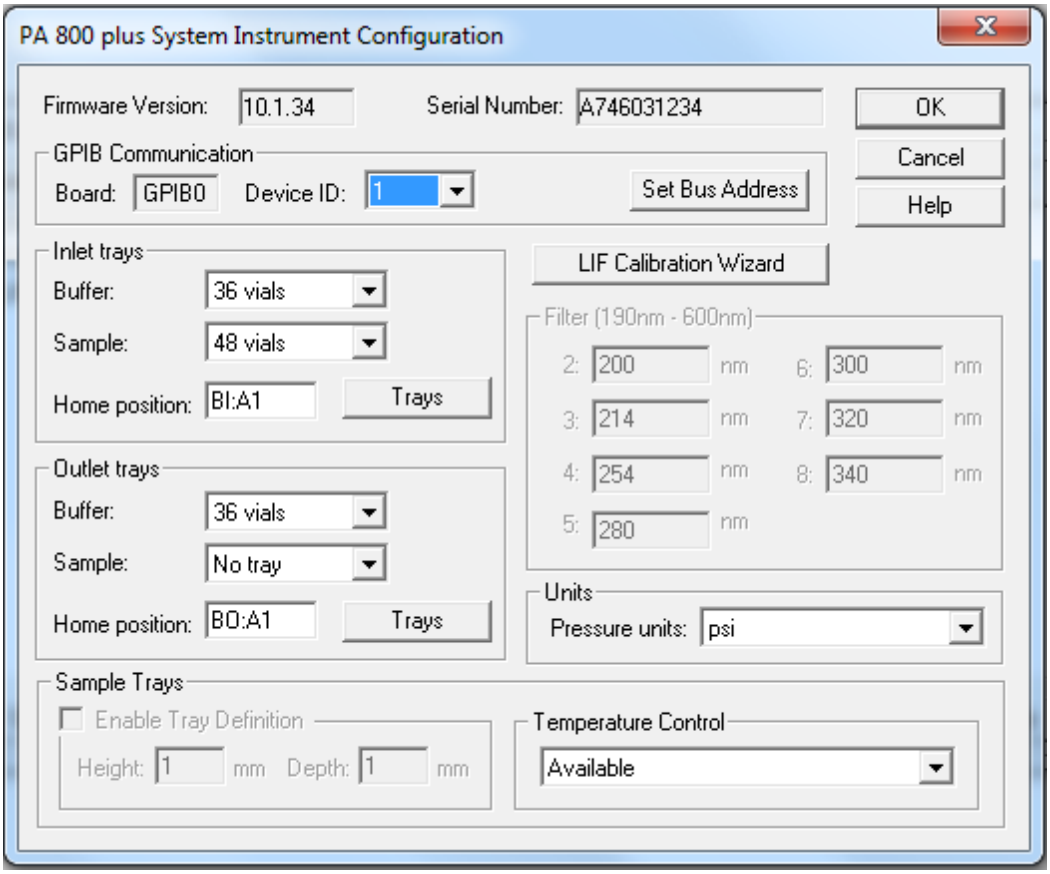

Automatic Calibration

Automatic calibration opens a series of windows explaining each step of the calibration process. During this process, the instrument runs a method and calculates a CCF. If this value is between 0.1 and 10.0, it should be accepted to complete calibration. CCF values outside of this range likely indicate a problem in the optical path. Refer to the *Installation Procedures* chapter of this guide for details on Automatic Calibration and troubleshooting the calibration process.

Calibration Method

Automatic calibration can seem a bit mysterious because the method parameters are not shown and data is not displayed. However, the method is simple. The capillary is first rinsed with a non-fluorescent solution. Next, a pressure separation is performed without voltage. Data is collected during this step. Finally, the capillary is rinsed with more of the non-fluorescent solution to purge the test mix solution. The result is a step shaped data file:

Figure A.2 Time Program for Automatic Calibration

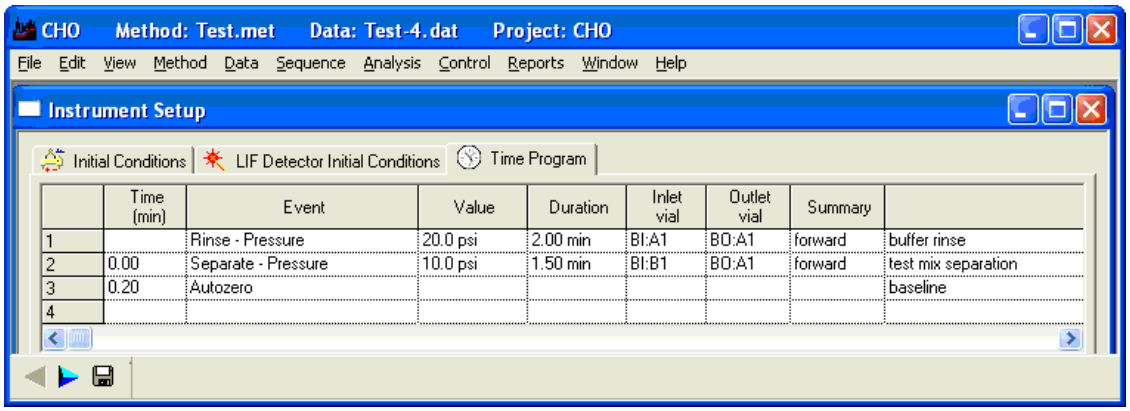

	Time (min)	Event	Value	Duration	Inlet vial	Outlet vial	Summary	
1		Rinse - Pressure	20.0 psi	2.00 min	BI:A1	BO:A1	forward	buffer rinse
2	0.00	Separate - Pressure	10.0 psi	1.50 min	BI:B1	BO:A1	forward	test mix separation
3	0.20	Autozero						baseline
4								

Figure A.3 Representative Results from Automatic Calibration Using Method in Figure A.2

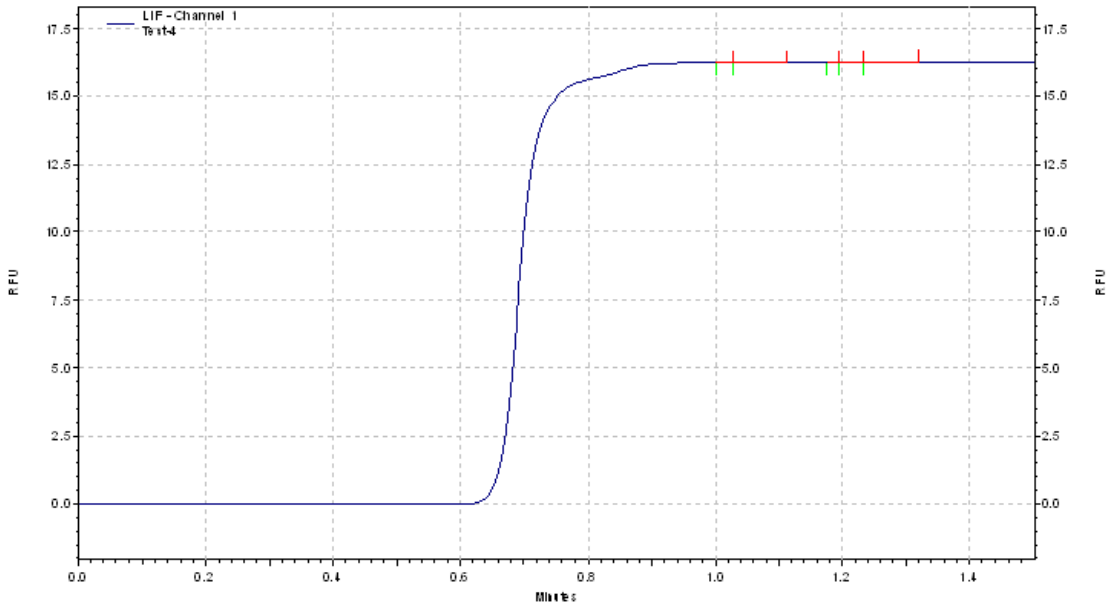

(Water and fluorescein in 30 cm 50 µm BFS capillary.)

Non-fluorescent Solutions

Typically, the non-fluorescent solution used in the calibration is the separation buffer. Always be careful that this solution is safe for use in the type of capillary being used. For example, borate buffer should never be used for calibration of coated capillaries such as those used with IEF, Carbohydrate, and ssDNA separations. Another concern with buffers is possible interaction with fluorescein. When borate and fluorescein are mixed, the fluorescence increases for a short period of time. This causes a bump in the step data. To eliminate the bump, the fluorescein is mixed 1:1 with the buffer for the calibration mix. This mixture loses fluorescence after an hour or more and should be discarded. Water is almost always safe on capillaries and does not interact with fluorescein (do not need to mix 1:1 for test solution). An expected target response value for water/fluorescein calibration has not been established for the 75 µm 60 cm bare fused silica capillary. (Water does not make such a good separation buffer.)

LIF Calibration for Different Dimension Capillaries

For detector performance tests, a 75 µm 60 cm total length bare-fused silica capillary is used. Many applications require capillaries with different dimensions, and capillary dimensions can affect the test mix calibration in two ways. When the capillary length is different from 60 cm, the step change occurs at a different time. Automatic calibration calculates this time based on the values entered for the capillary in the calibration wizard. If the diameter of the capillary is changed, the target value is different. For a bare-fused silica capillary, this new target value can be calculated based on the 75 µm capillary target:

75 µm capillary cross-sectional area:	= π * r^2 = 3.14 * (75/2) ^ 2 = 4418
50 µm capillary cross sectional area:	= 3.14 * (50/2) ^2 = 1963
Area ratio:	= 1963/4418 = .44
50 µm target:	= .44 * 75 µm target = .44 * 35 RFU = 15.4

The calibration wizard requires an integer for a target value, so the new 50 µm bare-fused fluorescein target is rounded to 15. This rounding is not a problem because RFU are arbitrary units. As long as the same number is used as the target, a given concentration should have the same response on any detector, capillary, or laser. Because the target is rounded down, it is likely the raw detector response is slightly higher than the target value. This causes the CCF to be slightly smaller than one. This does not have any affect on the sensitivity because the signal and the noise are corrected by the same CCF.

LIF Calibration for Different Fluorescent Solutions

A given application can require use of a special fluorescent marker. Depending on the marker, the emission wavelength can be significantly different than fluorescein. In this case, it is likely that different filters are required. With different filters, the standard fluorescein target is no longer valid. Even if fluorescein can be detected at the new wavelength, a new target value should be established. It can also be necessary to use the application fluorescent solution instead of fluorescein. Establishing a new target value is simple. Use manual calibration to set the CCF to 1.0. Run the pressure separation method described above six times. Average the response of the step change in the six runs. This value is the new target.

If an application requires a coated capillary, borate solution should not be used. Substituting water for the borate should be safe for most capillary coatings. When water is used in place of buffer, do not mix the fluorescein 1:1 with buffer or water. Inject the fluorescein without dilution.

Standard System Performance Test

The standard calibration test uses borate buffer and a test mix solution of fluorescein mixed 1:1 with borate buffer. The mix of fluorescein with buffer is necessary to achieve a flat step change. Borate buffer is used because the system performance test uses an electrophoretic separation step. Water cannot be used for an electrophoretic separation. You can create a method for a 60 cm 75 µm bare fused capillary as follows:

Figure A.4 Time Program for System Performance Test

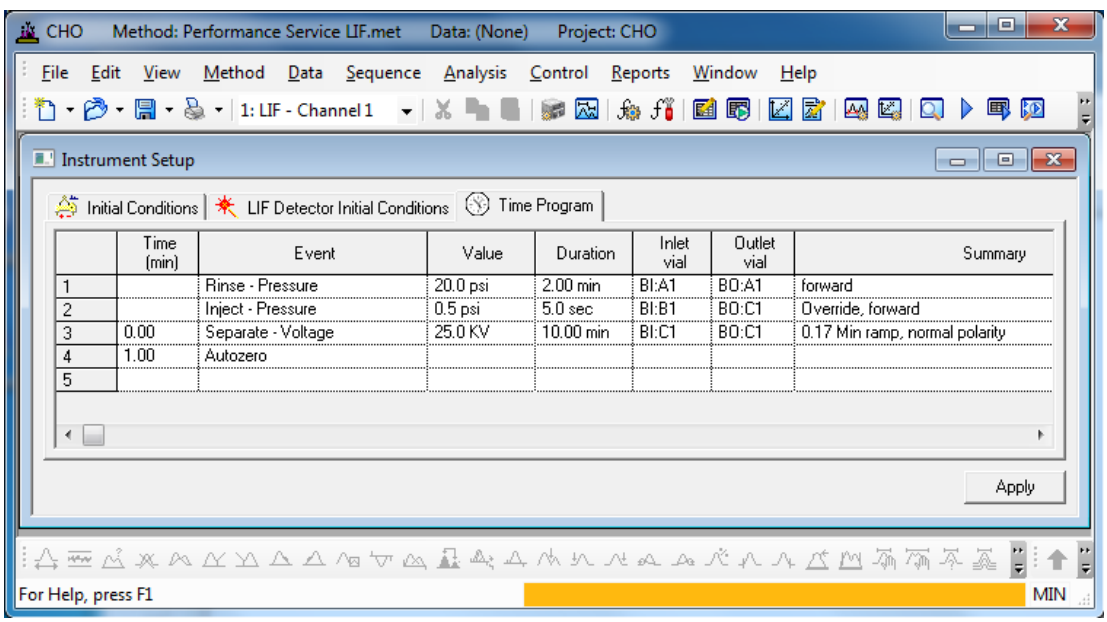

	Time (min)	Event	Value	Duration	Inlet vial	Outlet vial	Summary
1		Rinse - Pressure	20.0 psi	2.00 min	BI:A1	BO:A1	forward
2		Inject - Pressure	0.5 psi	5.0 sec	BI:B1	BO:C1	Override, forward
3	0.00	Separate - Voltage	25.0 KV	10.00 min	BI:C1	BO:C1	0.17 Min ramp, normal polarity
4	1.00	Autozero					
5							

The rinse and separation vials contain borate and the inject vial contains a 1:1 mixture of fluorescein and buffer. A peak is detected at about 5 minutes. Optimize the integration so only the main peak

and small contaminant peaks are detected. Annotate the peak with S/N (ASTM). On a calibrated instrument, the S/N (signal-to-noise ratio) should be greater than 10,000.

Figure A.5 Representative Results from System Performance Test Using Method in Figure A.4

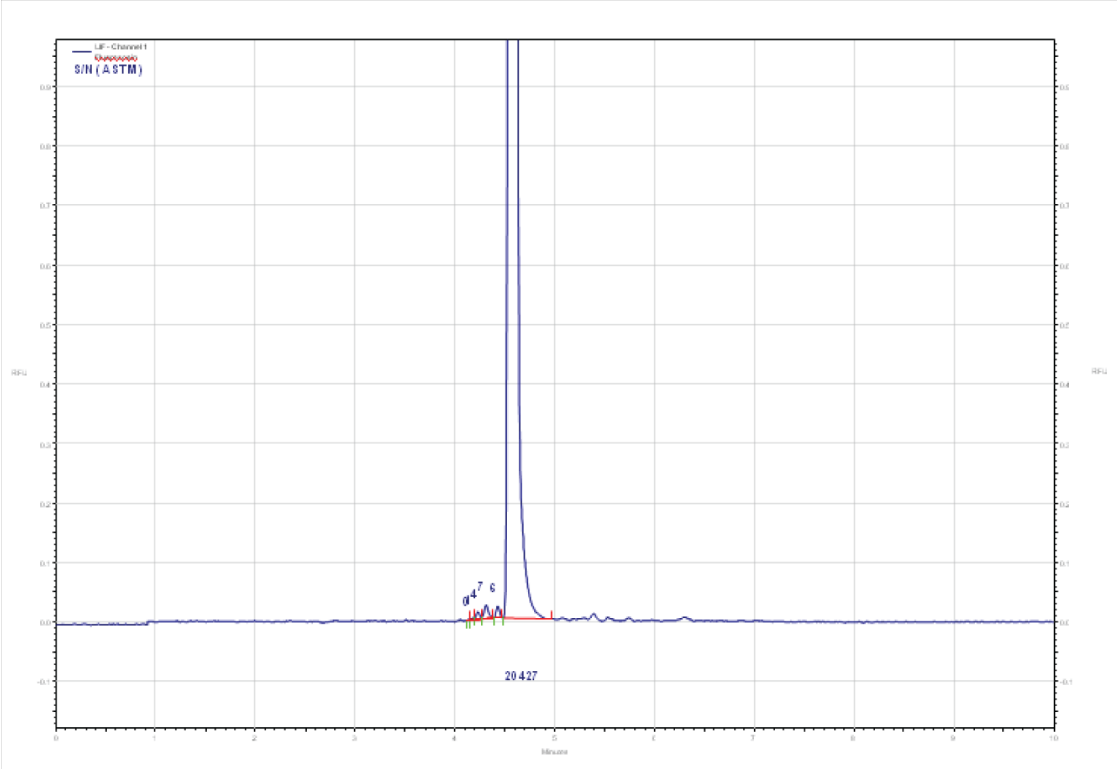

If the suitability option has been selected in the instrument configuration, a pass/fail criteria can be programmed into the method. Suitability reports can only be generated as part of a sequence.

Troubleshooting

Many variables can affect the quality of an LIF method. To simplify troubleshooting, it is necessary to isolate and verify the performance of each of these variables. Following is a list of steps for troubleshooting an LIF system.

Figure A.6 LIF Performance Troubleshooting Flow Chart

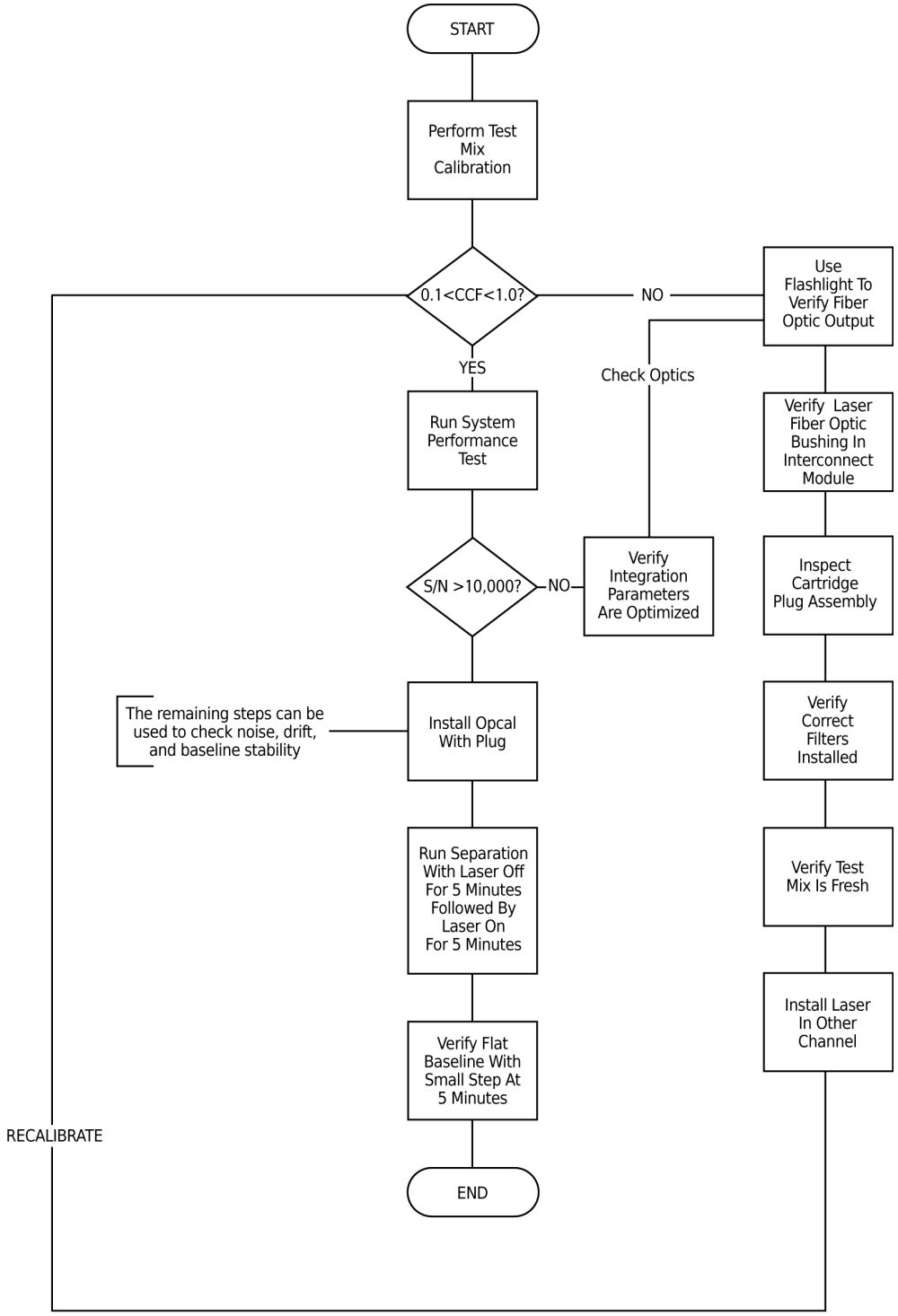

APPENDIX B

Evaluating PA 800 Plus System UV Filters

Overview

PA 800 Plus systems can be configured with UV detection. Absorbance wavelength is determined by the filters installed on the system. Up to seven positions* are available for different wavelength filters. When a method is run, the instrument selects the specified filter and positions it in the optical path. This makes it important to verify the correct wavelengths are associated with their respective filter positions. Also, filter characteristics can change with time, heat, humidity, exposure to UV, and handling. For this reason, it is important to periodically check or replace these filters. The purpose of this overview is to describe a method for testing UV filters using a certified spectrophotometer.

Spectrophotometers are typically not designed for the purpose of analyzing filters. More commonly, they are set up for analysis of solutions contained in cuvettes. Cuvettes are typically 1 cm x 1 cm square by some varying degree of height. To use a spectrophotometer to measure the UV filters for the PA 800 Plus system, it is necessary to position an individual filter at a height such that the optical beam of the spectrophotometer passes through the center of the filter. A special filter holder tool is available for Beckman Coulter model DU 700 series and model DU 800 spectrophotometers. Refer to Figure B.1.

Figure B.1 Filter Holder Tool (PN A32981)

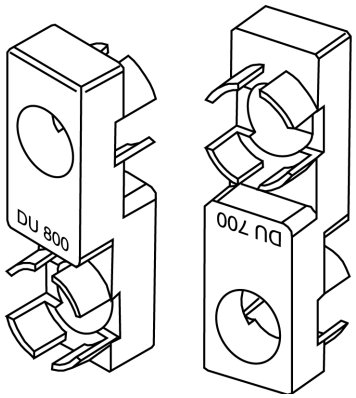

* For systems that use both UV and PDA detection, the last filter position (position 8) must be left open, with no filter installed.

The default filters shipped with PA 800 Plus systems with UV detection are 200 nm, 214 nm, 254 nm, and 280 nm. Using the tools shown above, these filters can be scanned using a DU 800 or DU 700 Series spectrophotometer.

The filters used for UV detection all have a center wavelength (λ_c) of ± 2 nm. To find the λc use the following equation:

EQ 1

$$\lambda_c = \frac{2\lambda_1\lambda_2}{\lambda_1 + \lambda_2}$$

where

λ_c	=	Center Wavelength
λ_1 and λ_2	=	Half power points at beginning and ending wavelengths, typically referred to as Full Width at Half Maximum (FWHM)
λ_1	=	is the point of the trace left of the apex at 1/2 the maximum % Transmission.
λ_2	=	is the point of the trace right of the apex at 1/2 the maximum % Transmission.

The following example is a scan of a 214 nm filter using a qualified DU 800 spectrophotometer.

Figure B.2 Example of Calculating Center Wavelength using Full Width at Half Maximum

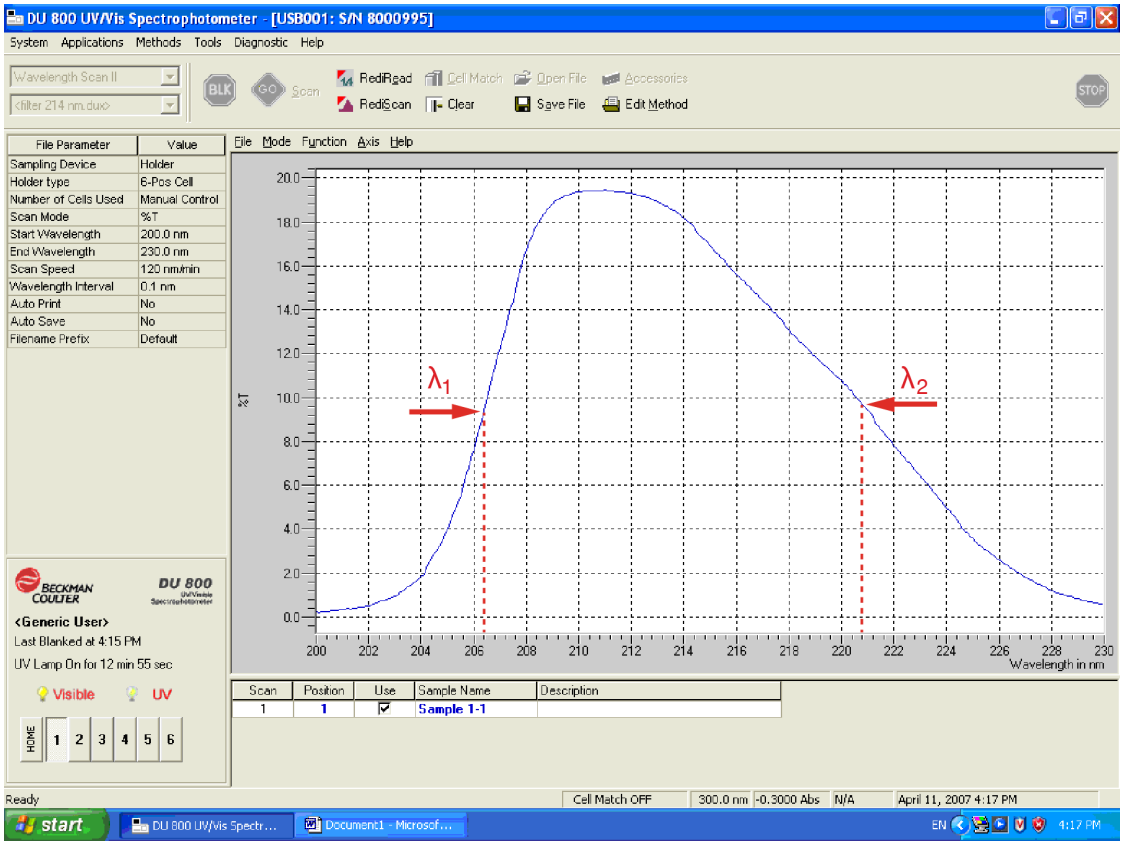

EQ 2

$$\lambda_c = \frac{2(206.4\ \text{nm})(220.8\ \text{nm})}{206.4\ \text{nm} + 220.8\ \text{nm}}$$

EQ 3

$$\lambda_c = 213.2\ \text{nm}$$

Figure B.3 Calculated Result of Center Wavelength

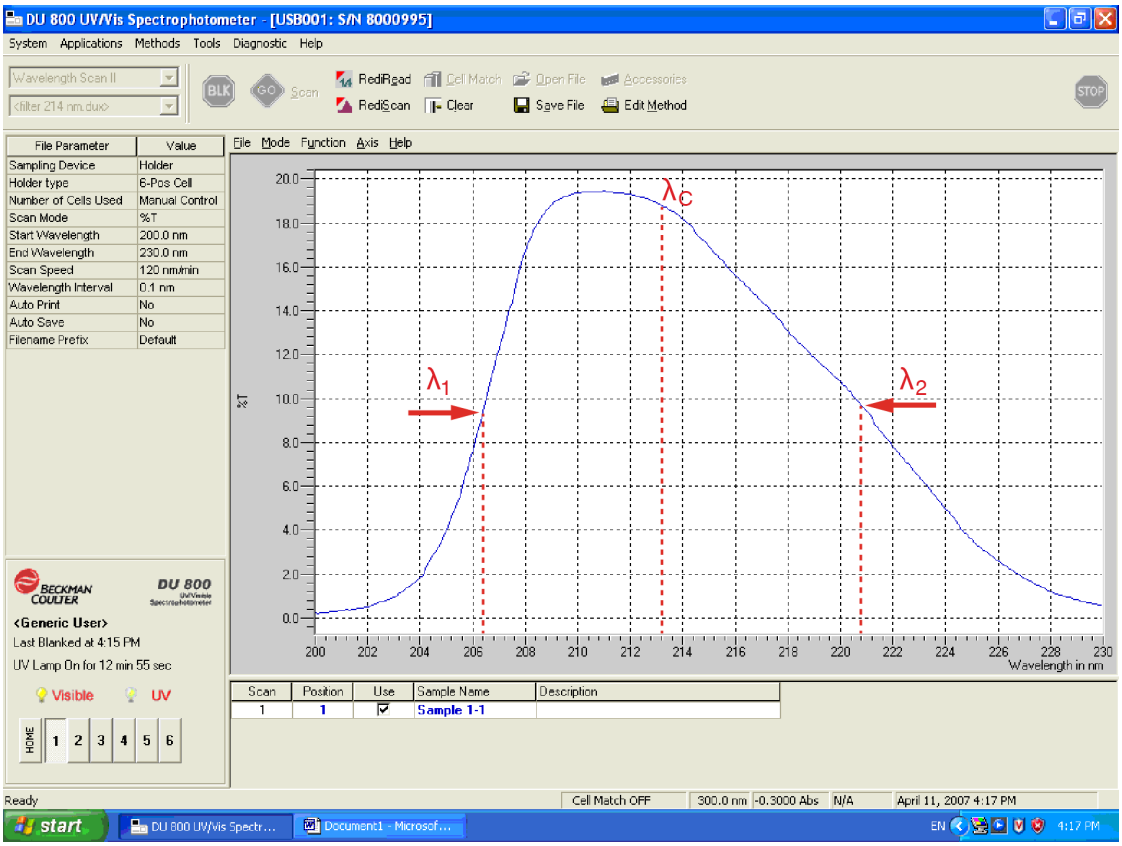

Since Filter characteristics can change with time, heat, humidity, exposure to UV light, and handling it is important to periodically check or replace these filters. For most applications a small change is not significant. Pass/Fail criteria should be established as part of method validation depending on the application and sample.

Revision History

Initial Issue, A51964AA, April 2009
32 Karat Software version 9.1
PA 800 *plus* Software version 1.1
PA 800 *plus* Firmware version 9.0

First Revision, A51964AB, December 2009
Revised corporate address.

Second Revision, A51964AC, February 2011
32 Karat Software version 9.1 patch
PA 800 *plus* Software version 1.1 patch
PA 800 *plus* Firmware version 9.2
Numerous syntax and grammatical edits
PA 800 *plus* Software version 10.1 (includes 32 Karat software)
PA 800 *plus* Firmware version 10.1 (incompatible with 9.x)

Third Revision, A51964AD, January 2014
Modified Class 1 Laser Caution Label.
Modified paragraphs of Restriction of Hazardous Substances (RoHS) Labels
Modified footnote on page B-81.
Modified sentence on page B-82.
Deleted several figures in APPENDIX B.
Added figures Figure B.2 and Figure B.3.
Added equations EQ 1 and EQ 2.

Fourth Revision, A51964AE, January 2018
PA 800 Plus Software version 10.2
32 Karat Software version 10.2
Rebranded. Applied new template. Updated legal content. Deleted safety content and added a reference to the safety content found in the *System Overview Guide*.

This guide applies to the latest software and firmware listed above, and any higher subsequent versions. When a subsequent software or firmware version affects the information in this guide, a new issue will be released to the SCIEX website. For updates, go to www.sciex.com *and download the latest version of the guide.*